FOR-1755 Rev.1.3

| 未注公差/General tolerances(mm) | | | | | | | | | | | | | | |
|---|---|---|---|---|---|---|---|---|---|---|---|---|---|---|
| 0 ~ 3 | >3 ~ 6 | >6 ~ 10 | >10 ~ 18 | >18 ~ 30 | >30 ~ 50 | >50 ~ 80 | >80 ~ 120 | >120 ~ 180 | >180 ~ 250 | >250 ~ 315 | >315 ~ 400 | >400 ~ 500 | >500 | 0.1/10 |
| ±0.12 | ±0.18 | ±0.22 | ±0.26 | ±0.31 | ±0.37 | ±0.57 | ±0.80 | ±0.93 | ±1.05 | ±1.15 | ±1.60 | ±2.20 | ±2.50 | ±2° |

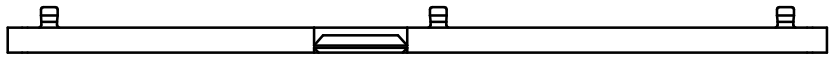

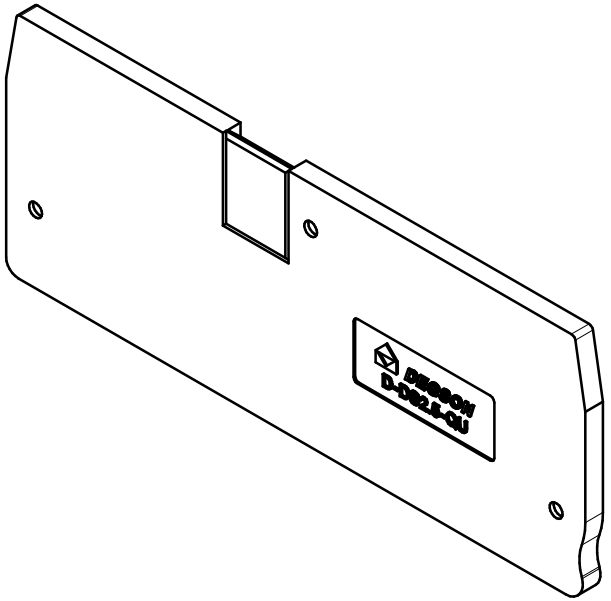


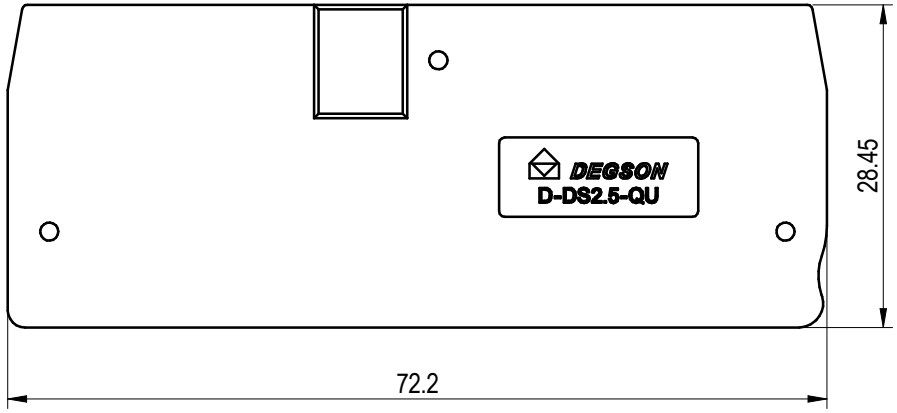


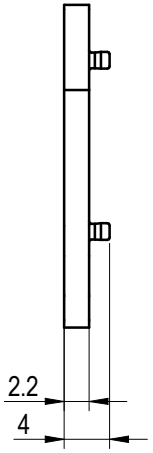


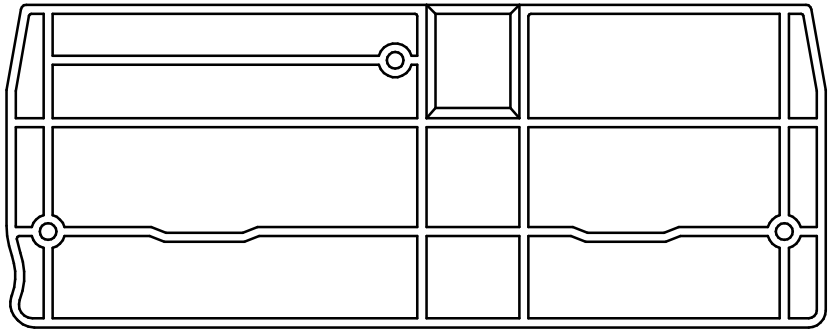

| | |
|---|---|
| 间距/ Pitch(mm)/ 线数范围/ Poles | 1.5/ 01P |
| 使用温度范围/ Operating temperature(℃) | - 40~+105 |
| 符合 RoHS环保要求/ Conform to RoHS | Yes |
| 阻燃等级/ Flame class | UL94V- 0 |

| REV | ECN | DESCRIPTION | DRFT | DATE |
|---|---|---|---|---|
| 00 | / | NEW DRAWING | 岑乔枫 | 2022.11.02 |

DEGSON

| | | |
|---|---|---|
| APPD: | 李根劳 | 2022.11.02 |
| CHKD: | 马恩开 | 2022.11.02 |
| DRFT: | 岑乔枫 | 2022.11.02 |

A4 mm (inch)

MATERIAL: PA66 | SURFACE/COLOR:

MAT NO./REV: 11060001549-1 / 00 | MAT STATUS: work

NAME: D-DS2.5-QU-01P-11-00L(H)

| DRAWING NO. | TYPE | DRAWING STATUS | SCALE | SHEET |
|---|---|---|---|---|
| 200006126 | | work | 1.5:1 | 1/1 |

Transfer or duplication of this document as well as the utilization or communication of its contents are prohibited unless explicit authorization is granted. Violations will be liable for compensation. All rights reserved for patent, utility model or designs registrations. 非给予明确授权，否则禁止转让、复制、利用、交流本文件的内容。侵犯者将负赔偿责任。本公司保留对涉及发明、实用新型和外观专利的所有权利。