JS1400 Series Navigation Switch



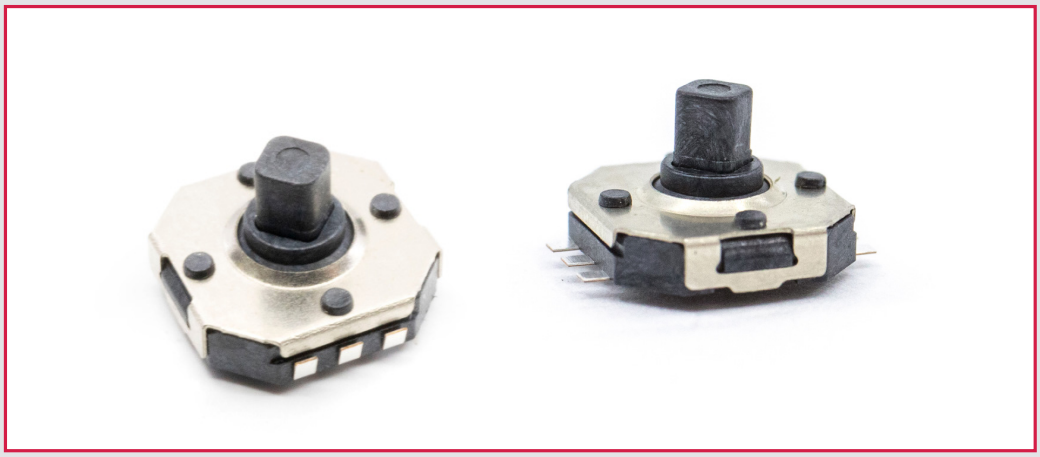

Specifications

Contact Arrangement: 5PST, Normally Open
Contact Rating: 50mA, 12VDC
Contact Resistance: 100mΩ MAX. Initial
Insulation Resistance: 100MΩ MIN. @ 100VDC
Dielectric Strength: 250VAC for 1 minute
Operating Temperature: -40°C to +85°C
Storage Temperature: -40°C to +85°C
Life Cycles: 100,000 Cycles
Actuation Force: 360gf ± 60gf Center Push; 160gf ± 50gf Tilt
Travel: 0.25 +0.1/-0.2mm Center Push; 5° +2.5°/-1° Tilt

Features & Benefits

5-Position Joystick Navigation; 4-Way Directional, Center Select
Surface Mount (SMT) design
7.4mm x 7.7mm Body
Actuator Height options: 4.0mm, 4.5mm, 5.0mm, 6.4mm
Flat Gull Wing or Inverted Gull Wing (J lead) termination
Silver Contact Material
Tape & Reel Packaging, 850 pieces per reel

Part Number Configurator

Series
□□□□□□
JS1400

Actuator
□
A - 4.50mm
B - 5.00mm
C - 4.00mm
D - 6.40mm

Termination
□
F - Flat Gull Wing
V - Inverted Gull Wing (J Lead)

Contact Material
□
Q - Silver

Specifications subject to change without notice

JS1400 Series Navigation Switch

Flat Gull Wing

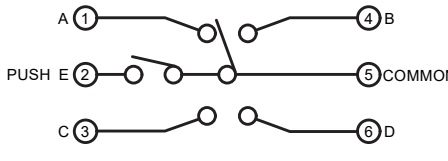

OPERATING POSITION	CONNECTED TERM. #
A	5 - 1
B	5 - 4
C	5 - 3
D	5 - 6
E (PUSH)	5 - 2

SCHEMATIC

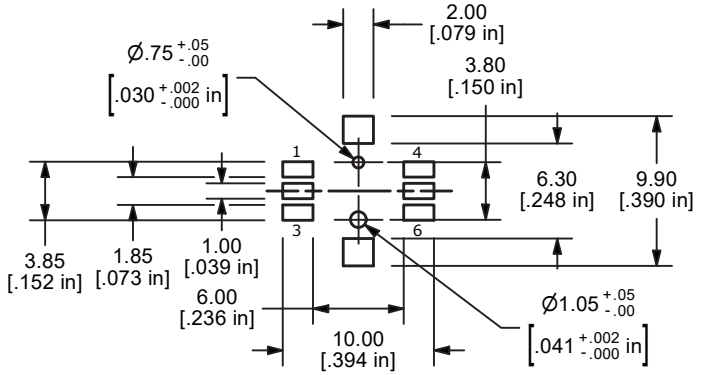

PCB LAYOUT

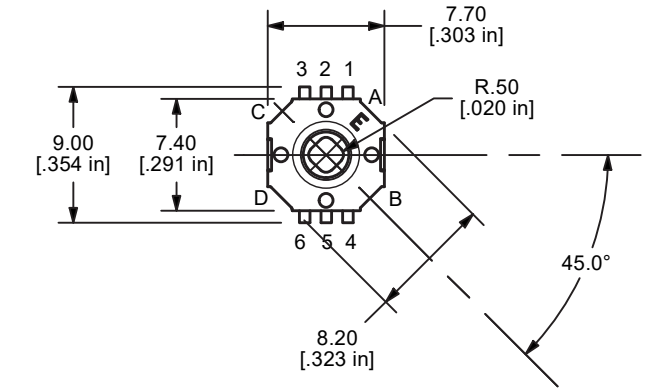

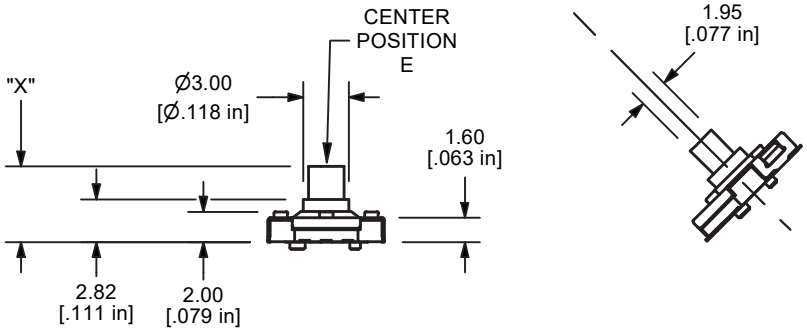

ACTUATOR	"X"
A	4.50
B	5.00
C	4.00
D	6.40

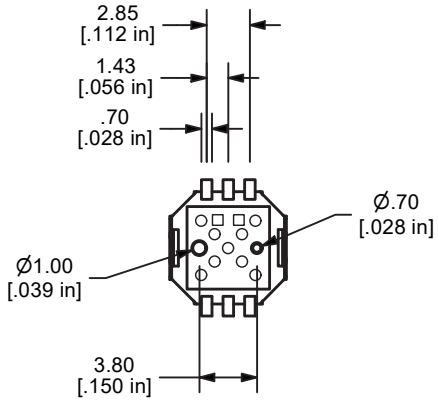

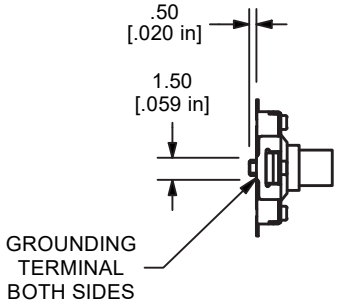

JS1400 Series Navigation Switch

Inverted Gull Wing (J Lead)

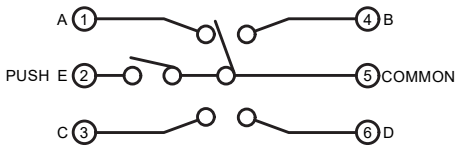

OPERATING POSITION	CONNECTED TERM. #
A	5 - 1
B	5 - 4
C	5 - 3
D	5 - 6
E (PUSH)	5 - 2

SCHEMATIC

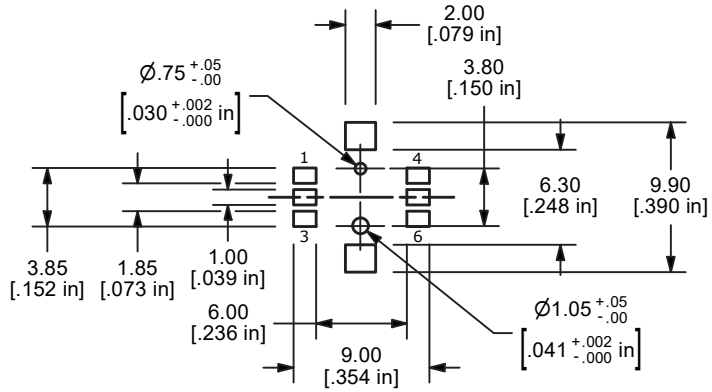

PCB LAYOUT

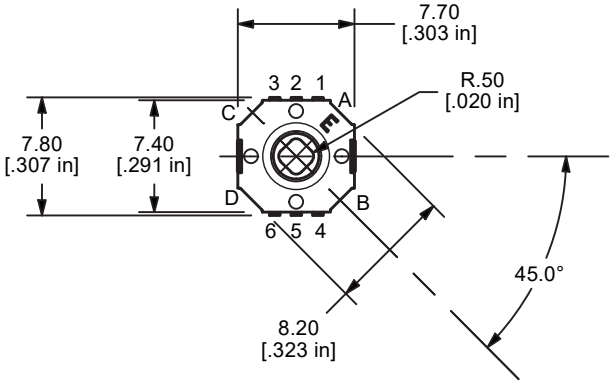

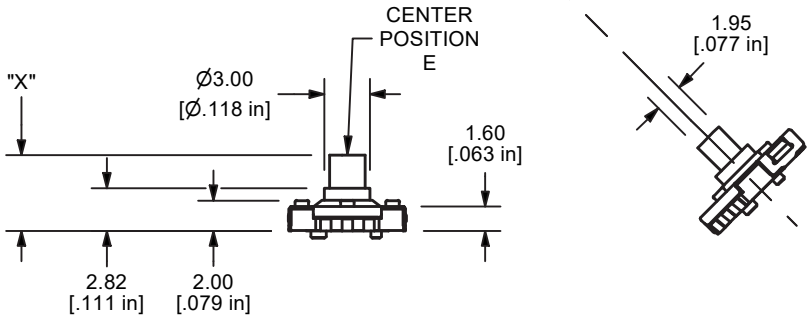

ACTUATOR	"X"
A	4.50
B	5.00
C	4.00
D	6.40

