KYOCERA SAW Filter
– GNSS-L1+L5 Filter –
Type Name : VF15-1197YAUUA1

Mar., 11, 2025

KYOCERA Corporation

Corporate Electronic Components Group

Electronic Devices Division

© 2025 KYOCERA Corporation all right reserved

Dimensions & Test Circuit of SAW Filter

Dimensions

(Top View)

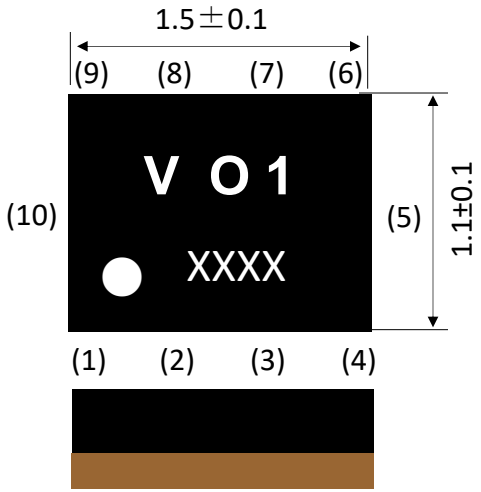

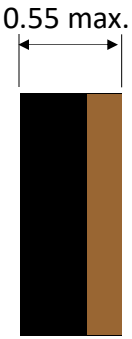

(Bottom View)

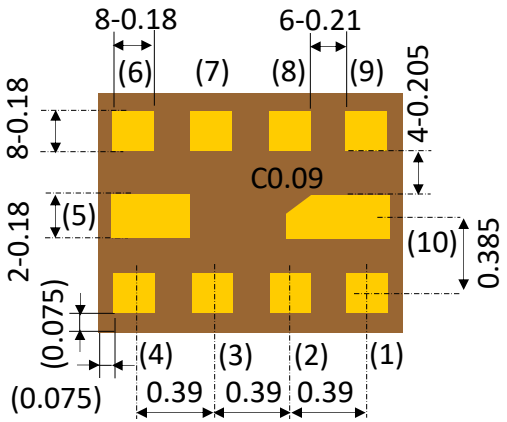

Test Circuit

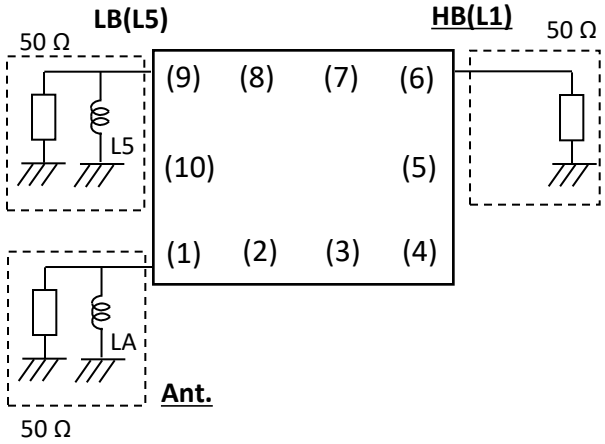

LA : 3.9nH (Ideal)
L5 : 7.5nH (Ideal)

Unit : mm
V : Identification mark
O1 : Identification no.
● : Index mark of pin 1
XXXX : Production code

Pin allocation

Pin No.	Function
(1)	Ant.
(2)	GND
(3)	GND
(4)	GND
(5)	GND
(6)	HB(L1)
(7)	GND
(8)	GND
(9)	LB(L5)
(10)	GND

© 2025 KYOCERA Corporation all right reserved

Rating

Items		Rating	Unit	Note
Operating Temperature Range		-40 to 105	deg.C	
Storage Temperature Range		-40 to 105	deg.C	
Max Input Power	Input port	15	dBm	5,000Hours,Ta=50deg.C ,CW
ESDLevel	Human Body Model	100	Volt	Complied to JESD22-A114
Input Port Nominal Impedance (Ant)		50//3.9nH	ohm	Unbalance
Output Port Nominal Impedance (LB: L5)		50//7.5nH	ohm	Unbalance
Output Port Nominal Impedance (HB: L1)		50	ohm	Unbalance
AEC-Q200		Grade2		Complied to AEC-Q200

© 2025 KYOCERA Corporation all right reserved

Characteristic table

Items			Frequency[MHz]			Unit	Kyocera Specification			Note
							min	typ	max	
L1 1.5GHz	Insertion Loss		1559.05	-	1563.15	dB	-	2.0	2.4	
			1574.39	-	1576.45	dB	-	1.5	2.0	
			1597.55	-	1605.89	dB	-	1.7	2.3	
	VSWR	Input	1559.05	-	1605.89	-	-	1.6	2.2	
		Output	1559.05	-	1605.89	-	-	1.7	2.2	
	GDT Ripple Deviation		1597.55	-	1605.89	ns	-	3	15	
	Attenuation		10	-	699	dB	40	44	-	
			703	-	798	dB	35	42	-	
			814	-	915	dB	35	40	-	
			1427	-	1463	dB	35	48	-	
			1710	-	1797	dB	40	46	-	
			1850	-	1980	dB	35	44	-	
			2010	-	2570	dB	35	45	-	
			3300	-	4200	dB	30	34	-	
			4400	-	5000	dB	27	31	-	
			5150	-	5950	dB	25	29	-	
L5 1.1GHz	Insertion Loss		1166.22	-	1186.68	dB	-	1.2	2.3	L5
			1196.91	-	1217.37	dB	-	1.0	2.3	E5b
			1226.58	-	1228.62	dB	-	1.2	2.3	L2C
	VSWR	Input	1166.22	-	1186.68	-	-	1.4	2.2	L5
			1196.91	-	1217.37	-	-	1.5	2.2	E5b
			1226.58	-	1228.62	-	-	1.2	2.2	L2C
		Output	1166.22	-	1186.68	-	-	1.7	2.2	L5
			1196.91	-	1217.37	-	-	1.5	2.2	E5b
			1226.58	-	1228.62	-	-	1.2	2.2	L2C
	GDT Ripple Deviation		1166.22	-	1186.68	ns	-	17	35	L5
			1196.91	-	1217.37	ns	-	5	25	E5b
			1226.58	-	1228.62	ns	-	2	25	L2C
	Attenuation		650	-	850	dB	30	36	-	
			850	-	950	dB	25	33	-	
			1427	-	1463	dB	25	29	-	
			1626	-	1661	dB	25	36	-	
			1710	-	2200	dB	30	32	-	
			2300	-	2690	dB	30	37	-	
			3300	-	4200	dB	28	33	-	
			4400	-	5000	dB	26	32	-	
			5150	-	5950	dB	24	31	-	

© 2025 KYOCERA Corporation all right reserved

Curve Data

VF15-1197YAUUA1 Specification

Ant-L1

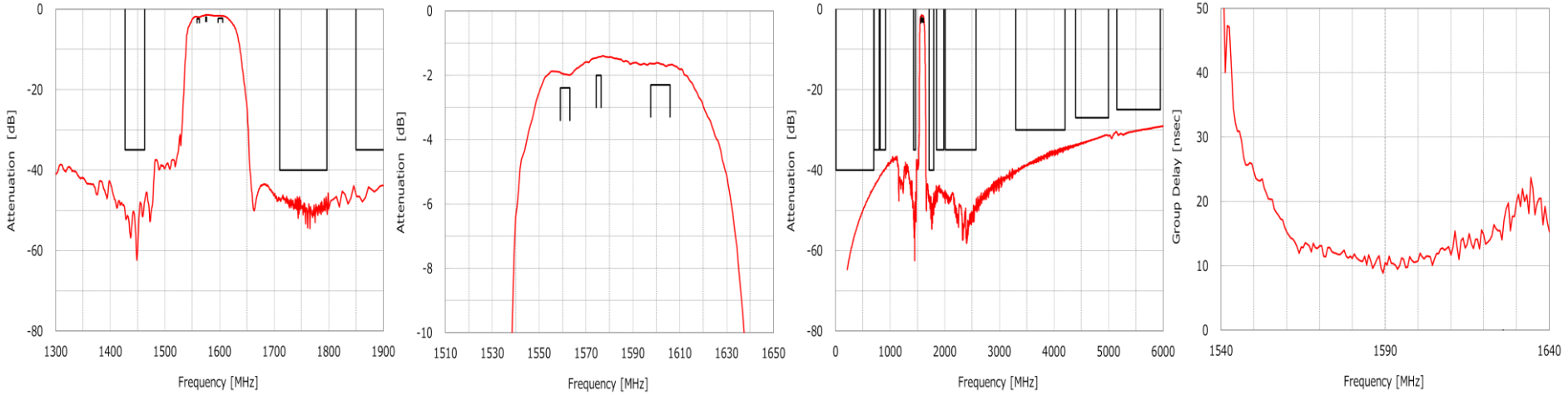

Ant-L5

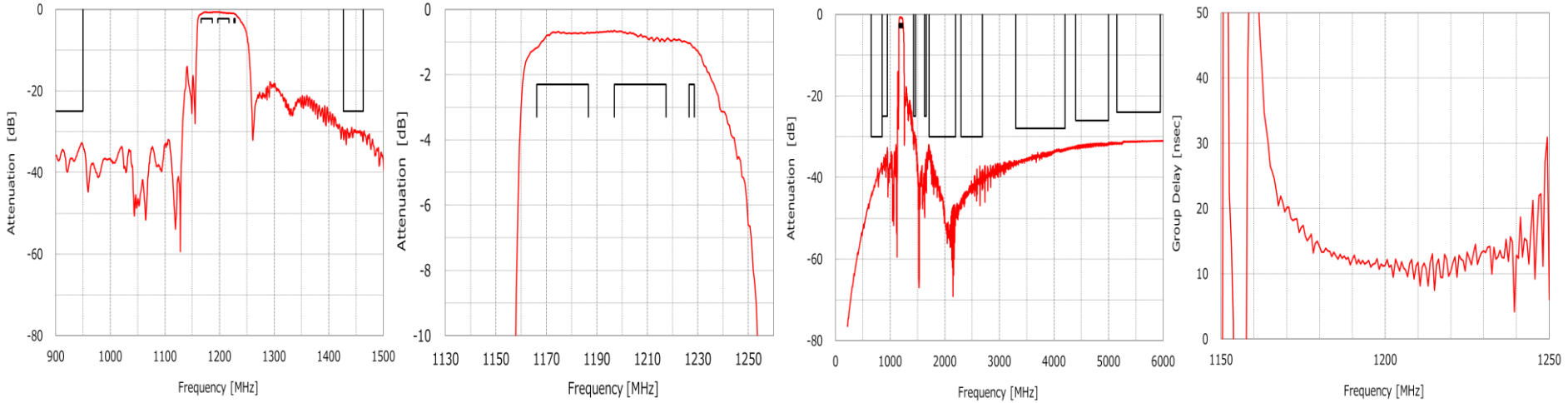

© 2025 KYOCERA Corporation all right reserved

Notice

1. Characteristics described in this datasheet are for references specifications shall be based on written documents agreed by each party.

2. Contents in this datasheet are subject to change without notice. It is recommended to confirm the latest information at the time of usage. Also, this datasheet is revised once a year. We may not be able to accept requests based on old datasheets.

3. Products in this datasheet are intended to be used in general electronic equipment such as office equipment, audio and visual equipment, communication equipment, measurement instrument and home appliances. It is absolutely recommended to consult with our sales representatives in advance upon planning to use our products in applications which require extremely high quality and reliability such as aircraft and aerospace equipment, traffic systems, safety systems, power plant and medical equipment including life maintenance systems.

4. Even though we strive for improvements of quality and reliability of products, it is requested to design with enough safety margin in equipment or systems in order not to threaten human lives directly or damage human bodies or properties by an accidental result of products.

5. It is requested to design based on guaranteed specifications for such as maximum ratings, operating voltage and operating temperature. It is not the scope of our guarantee for unsatisfactory results due to misuse or inadequate usage of products in the datasheet.

6. Operation summaries and circuit examples in this datasheet are intended to explain typical operation and usage of the product. It is recommended to perform circuit and assembly design considering surrounding conditions upon using products in this datasheet.

7. Technical information described in this datasheet is meant to explain typical operations and applications of products, and it is not intended to guarantee or license intellectual properties or other industrial rights of the third party or Kyocera.

8. Trademarks, logos and brand names used in this datasheet are owned by Kyocera or the corresponding third party.

9. Certain products in this datasheet are subject to the Foreign Exchange and Foreign Trade Control Act of Japan, and require the license from Japanese Government upon exporting the restricted products and technical information under the law. Besides, it is requested not to use products and technical information in the datasheet for the development and/or manufacture of weapons of mass destruction or other conventional weapons, nor to provide them to any third party with the possibility of having such purposes.

10. It is prohibited to reprint and reproduce a part or whole of this datasheet without permission.

© 2025 KYOCERA Corporation all right reserved