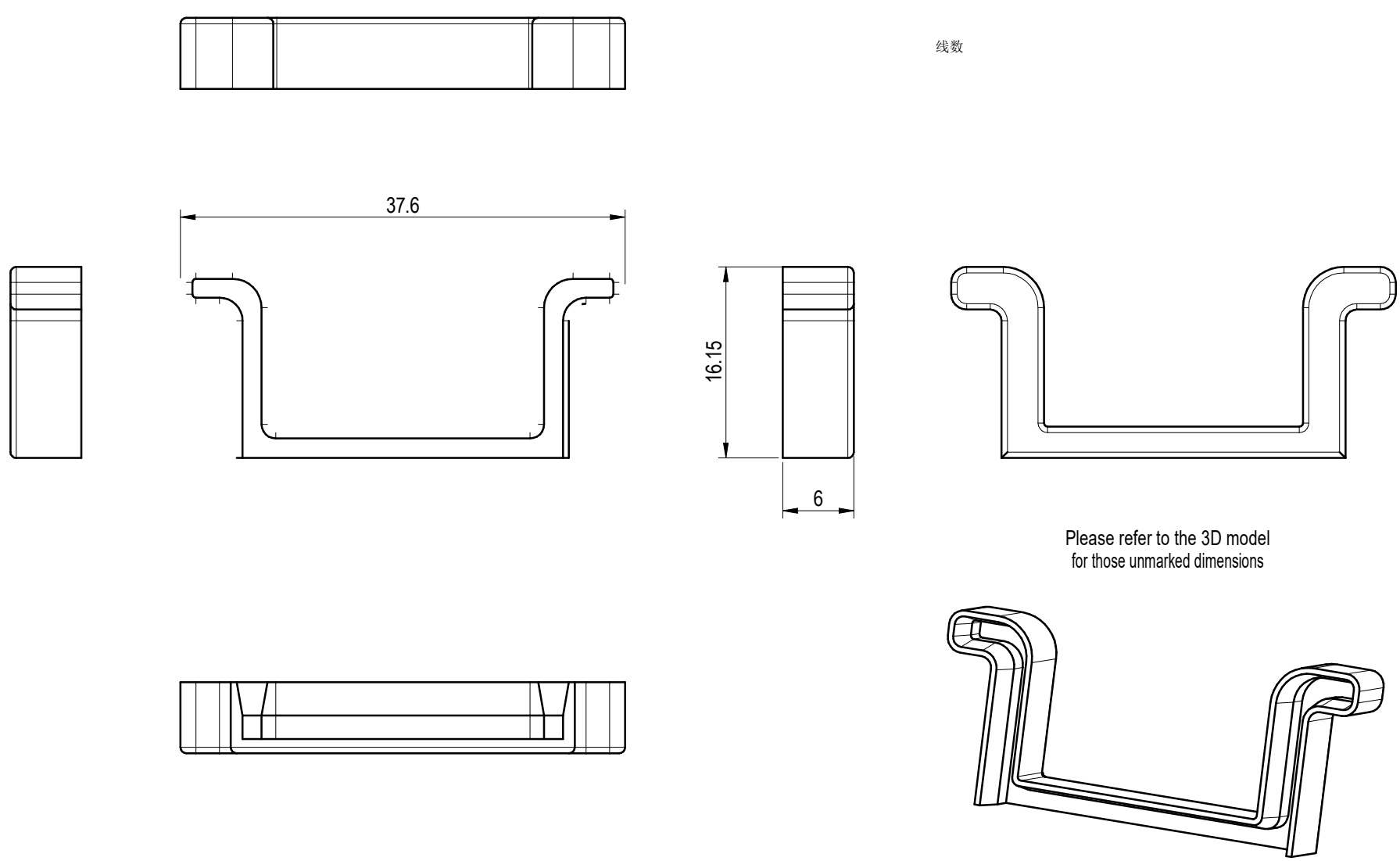

00		Initial release	郑启国	2022.03.23
REV	ECN	DESCRIPTION	DRFT	DATE

DEGSON

APPD:	李根劳	2022.03.23
CHKD:	马恩开	2022.03.23
DRFT:	郑启国	2022.03.23

A4 mm (inch)

MATERIAL: PA66	SURFACE/COLOR:
MAT NO./REV: 92118904472-1 / 00	MAT STATUS: work

NAME: NS35/15-CAP-01P-11-00L(H)

DRAWING NO.	TYPE	DRAWING STATUS	SCALE	SHEET
200060126	CUSTOMER DRAWING	已发布	2:1	1/1

Transfer or duplication of this document as well as the utilization or communication of its contents are prohibited unless explicit authorization is granted. Violations will be liable for compensation. All rights reserved for patent, utility model or designs registrations. 除非给予明确授权，否则禁止转让、复制、利用、交流本文件的内容。侵犯者将负赔偿责任。本公司保留对涉及发明、实用新型和外观专利的所有权利。