KYCON, Inc. 305 Digital Drive, Morgan Hill, CA 95037 (408)494-0330

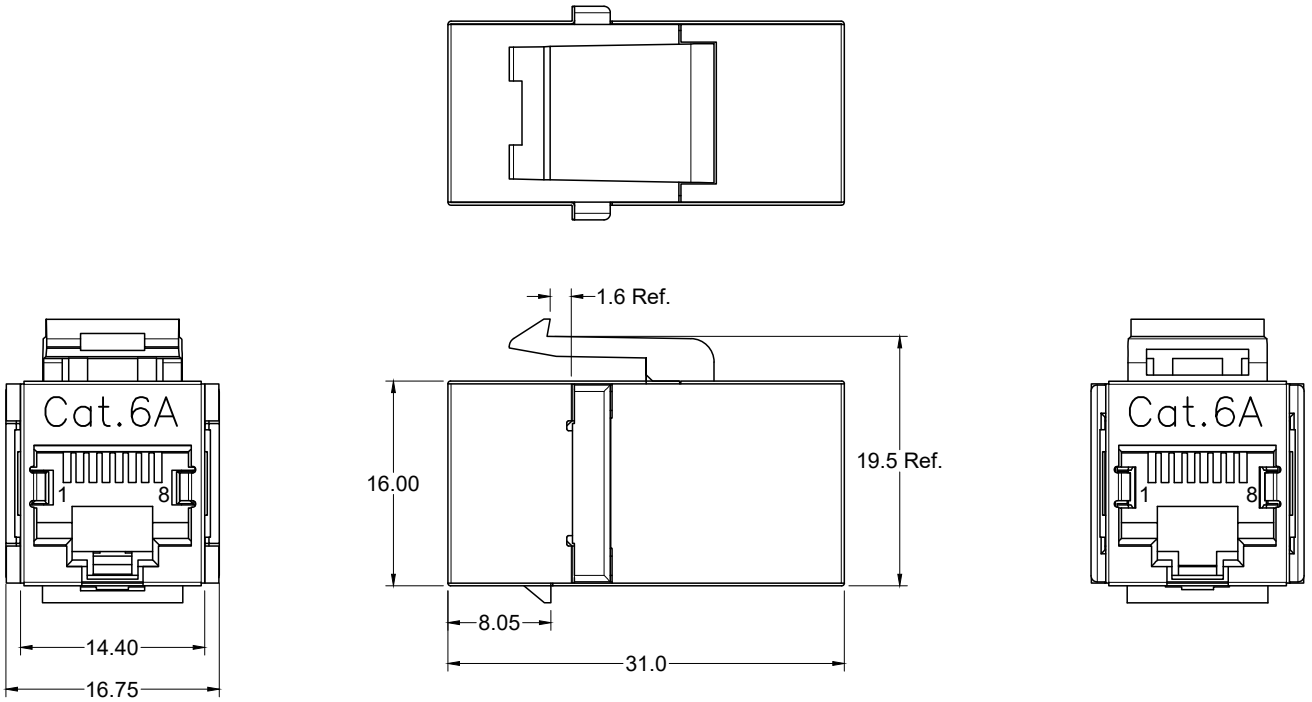

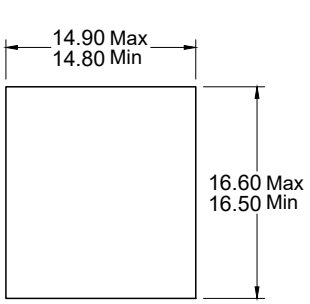

Front Panel Jack Clearance
(Without Latch Feature)

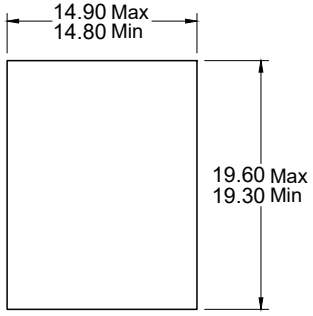

Single Panel (Latch) Clearance
Panel Thickness 1.60mm (0.062 inch)

PIN-OUT
1 TO 1
2 TO 2
3 TO 3
4 TO 4
5 TO 5
6 TO 6
7 TO 7
8 TO 8

Materials and Finish

Housing Material:
Engineering Thermoplastic,
UL 94V-0 Rated,

Contact Material:
Phosphor Bronze
50u" Gold Over Nickel Plating

Shield Material:
Stainless Steel

Electrical Characteristics

Voltage Rating: 120V AC RMS.

Current Rating: 1.5 A

Contact Resistance:
30 MilliOhms Max.

Insulation Resistance:
1,000 MegOhms Min. @500 VDC

DielectricStrength:
1,000 VAC RMS 60Hz, 1 Minute.

Mechanical Characteristics

Durability: 750 Mate Cycles Min.

RoHS COMPLIANT

Tolerances
X.X ± 0.38
X.XX ± 0.25
Unless Stated Otherwise

REV.	DATE	DESCRIPTION	REV. BY	CHK. BY	DRAWN BY	DATE
A0	03/12/25	New Drawing	C. Kelleher	C. Kelleher	C. Kelleher	03/12/25
					UNITS	
					mm	

KLAPX-CPLR-S-88-50-C6A

RJ45 Coupler, 8P8C Shielded, With Panel Tabs, CAT 6A, RoHS Compliant

KYCON