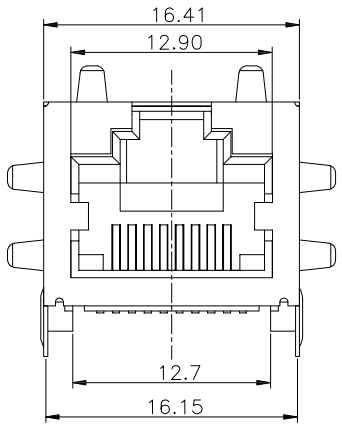

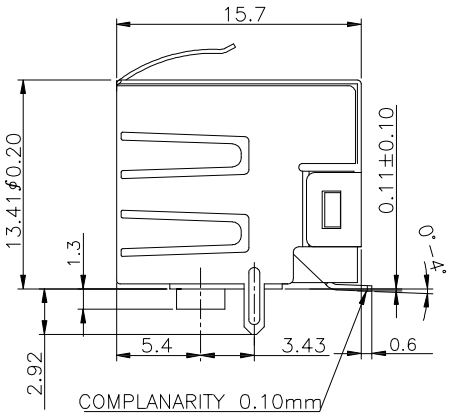

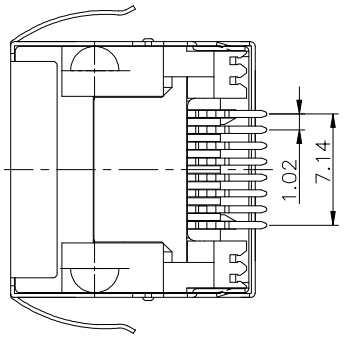

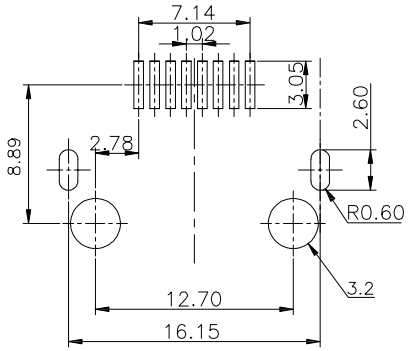

PCB LAYOUT
COMPONENT SIDE SHOW

NOTES:

ELECTRICAL:
1. VOLTAGE RATING : 125 VAC.
2. CURRENT RATING : 1.5 AMP.
3. CONTACT RESISTANCE : 30 MILLIOHMS MAX.
4. INSULATION RESISTANCE: 1000 MEGOHMS MIN. @ 500 VDC.
5. DIELECTRIC STRENGTH : 1000 VAC 60Hz, 1MIN.
6. LED RATINGS: FORWARD VOLTAGE: 2.2 VOLTS TYPICAL.
   REVERSE VOLTAGE: 5 VOLTS MAXIMUM.
7. OPERATING: 750 CYCLES MIN.

MECHANICAL:
1. HOUSING MATERIAL : GLASS FILLED HIGH TEMP. UL94V-0.
2. INSERT MATERIAL : GLASS FILLED HIGH TEMP. UL94V-0.
3. SHIELD MATERIAL : COPPER ALLOY NICKEL PLATING FOR ALL. PLATING NICKEL 50u"MIN. FOR ALL.
4. CONTACT MATERIAL : PHOSPHOR BRONZE t=0.35 mm. UNDER PLATING:NICKEL PLATING 50~80u".OVERALL
5. PLATING : 6u"GOLD PLATING OVER NICKEL
6. PCB RETENTION PRE-SOLDER : 1 LB MIN.
7. PCB RETENTION POST-SOLDER: 10 LBS MIN.

ENVIRONMENTAL:
1. STORAGE : -40°C TO +85°C.
2. OPERATION: -40°C TO +85°C.
3. IR REFLOW SOLDERING TEMPERATURE: 255°C TO 265°C (5~10 SECONDS)

MATES WITH MODULAR PLUG CONFORMING TO TIA-1096-A.
PACKING : Tape&Reel

RoHS compliant
Unit: mm

Scale	Free
TOLERANCE	
X.	±0.50
X.X	±0.30
X.XX	±0.20
X.XXX	±0.10
DIM	TOL
Angle	±5°

Id.	Modification	Date	Name
0	Drawn	22.03.2016	Winnie

	Date	Name
Drawn	22.03.2016	Winnie
Approved	22.03.2016	Winnie

ASSMANN WSW components

Customer-No.

ASSMANN WSW-No.
AMJH-8-S-R-R18

Drawing-No.
ASS 7179 CO

rev00

Replace

Sheet

SV4109