EMC Filters

Feedthrough components
Filters

Series/Type: **B85321**

Date: August 2026

© TDK Electronics AG 2026. Reproduction, publication and dissemination of this publication, enclosures hereto and the information contained therein without TDK Electronics' prior express consent is prohibited.

Rated voltage V_R: 250 V AC
Rated current I_R: 16 A to 500 A
Rated capacitance C_R: 2 × 0.0025 µF to 2 × 4.7 µF



Schematic picture

Construction

- Building-block system
- MKP technology (dry, self-healing)
- Dielectric: polypropylene, metallized
- Metal case, polyurethane potting (UL 94 V-0)
- For central screw fixing

Features

- Compact dimensions
- Versions with rated voltage 440 V AC available on request
- High insertion loss
- Easy to install
- High contact reliability thanks to central screw fixing
- Comply with IEC 60939
- UL and cUL approvals

Typical applications

Broadband interference suppression for AC/DC supply lines, e. g. in

- shielded rooms
- telephone exchanges, base stations
- electrical machines and systems
- power supplies

Terminals

- Threaded studs
- Axial leads
- Soldering tag
- Tab connectors

Marking

Marking on component: Manufacturer's logo, ordering code, rated capacitance, rated voltage, rated current, climatic category, circuit diagram, date code, approvals
Minimum data on packaging: Manufacturer's logo, ordering code, quantity, date code

Circuit diagram

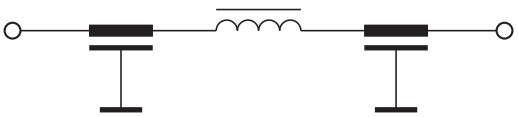

SSB3224-X

Feedthrough filters Ø 16 mm

Technical data and measuring conditions

Rated voltage V_R	250 V AC (50/60 Hz) / 600 V DC
Rated current I_R	Referred to 40 °C rated temperature Reduced current values at 400 Hz
Capacitance tolerance	±20%
Climatic category (IEC 60068-1)	40/085/56 (–40 °C/+85 °C/56 days damp heat test)
Screw cap fixing	M10 × 0.75
Approvals	UL 1283, 250 V AC and CSA C22.2 No.8, 250 V AC

Characteristics and ordering codes

I_R A	C_R µF	Terminal	Figure	Approx. weight g	Ordering code	Approvals	
V_R = 250 V AC, V_R = 600 V DC, V_{test} = 2700 V DC							
16	2 × 0.0025	M2	1	50	B85321A2502X160	×	×
16	2 × 0.0025	Soldering tab	2	50	B85321A2502Y160	×	×
16	2 × 0.0025	Tab connectors	4	50	B85321A2502W160	×	×

× = Approval granted

Insertion loss (dB); typical values at 50 Ω

C_R µF	10 kHz	100 kHz	1 MHz	10 MHz	100 MHz	1 GHz
2 × 0.0025	–	–	–	25	> 80	> 80

Dimensional drawings

Figure 1, B85321A2502X160

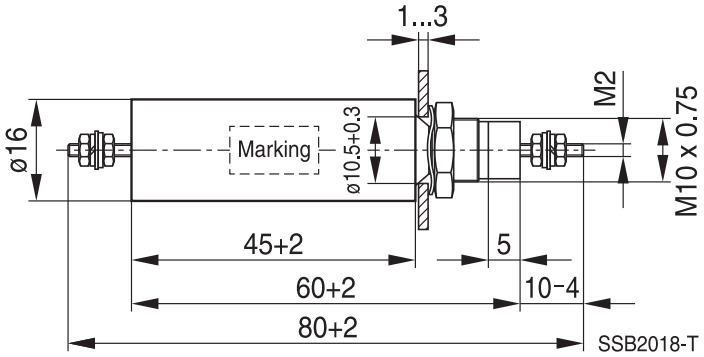

Thread	Tightening torque
M2	0.2 +0.05 Nm
M10 × 75	3 +0.5 Nm

General tolerances according to ISO 2768-cL
Dimensions in mm

Figure 2, B85321A2502Y160

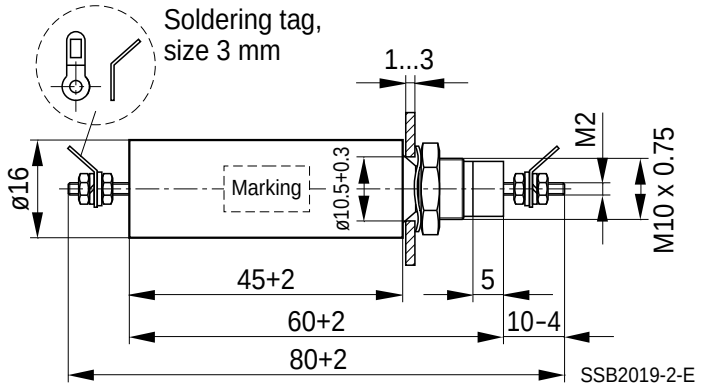

Tightening torque: 3 +0.5 Nm

General tolerances according to ISO 2768-cL
Dimensions in mm

Figure 3, B85321A2502W160

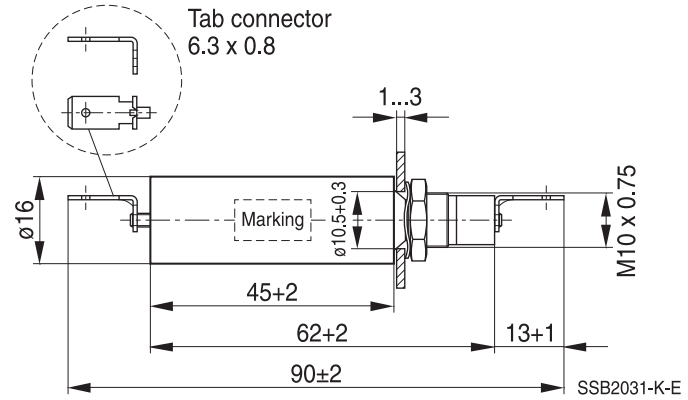

Tightening torque: 3 +0.5 Nm

General tolerances according to ISO 2768-cL
Dimensions in mm

Feedthrough filters Ø 30 mm

Technical data and measuring conditions

Rated voltage V_R	250 V AC (50/60 Hz) / 500 V DC and 600 V DC
Rated current I_R	Referred to 40 °C rated temperature Reduced current values at 400 Hz
Capacitance tolerance	±20%
Climatic category (IEC 60068-1)	40/085/56 (–40 °C/+85 °C/56 days damp heat test)
Screw cap fixing	M20 × 1
Approvals	UL 1283, 250 V AC and CSA C22.2 No.8, 250 V AC

Characteristics and ordering codes

I_R A	C_R µF	V_R DC V	V_{test} DC V	Terminal	Approx. weight g	Ordering code	Approvals cULus	
V_R = 250 V AC								
25	2 × 0.1	600	3000	M6	220	B85321A2204A250	×	×
25	2 × 0.5	600	2000	M6	220	B85321A2105A250	×	—
25	2 × 1.0	500	1700	M6	220	B85321A2205A250	×	—
75	2 × 0.1	600	3000	M6	220	B85321A2204A750	×	×
75	2 × 0.5	600	2000	M6	220	B85321A2105A750	—	—
75	2 × 1.0	500	1700	M6	220	B85321A2205A750	×	—

× = Approval granted

Insertion loss (dB); typical values at 50 Ω

C_R µF	10 kHz	100 kHz	1 MHz	10 MHz	100 MHz	1 GHz
2 × 0.1	2	10	25	70	> 100	> 100
2 × 0.5	5	25	45	80	> 100	> 100
2 × 1.0	10	30	60	90	> 100	> 100

Dimensional drawing

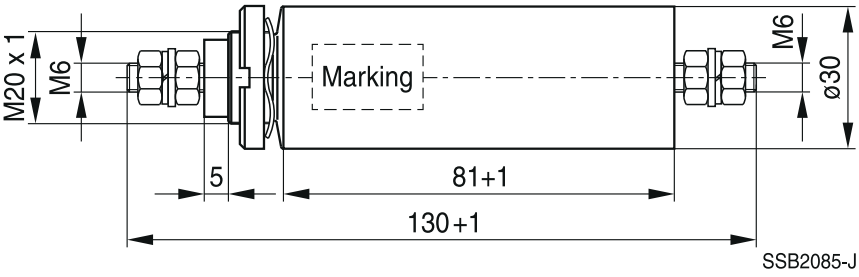

Thread	Tightening torque
M6	3 +0.5 Nm
M20 × 1	10 +1 Nm

General tolerances according to ISO 2768-cL
Dimensions in mm

Feedthrough filters Ø 55 mm

Technical data and measuring conditions

Rated voltage V_R	250 V AC (50/60 Hz) / 350 V DC and 600 V DC
Rated current I_R	Referred to 40 °C rated temperature Reduced current values at 400 Hz
Capacitance tolerance	±20%
Climatic category (IEC 60068-1)	40/085/56 (–40 °C/+85 °C/56 days damp heat test)
Screw cap fixing	M32 × 1.5
Approvals	UL 1283, 250 V AC

Characteristics and ordering codes

C_R	V_R	V_{test}	Terminal	Dimensions			Approx.	Ordering code	Approvals
µF	DC V	DC V		l+1 mm	l_1-1	l_2-3	weight g		
V_R = 250 V AC, I_R= 63 A									
2 × 0.5	600	3000	M6	100	166	45	600	B85321A2105A630	×
2 × 1.0	600	2500	M6	100	166	45	600	B85321A2205A630	×
2 × 2.0	600	2500	M6	100	166	45	600	B85321A2405A630	×
2 × 4.7	350	1700	M6	100	166	45	600	B85321A2945A630	×
V_R = 250 V AC, I_R= 100 A									
2 × 0.5	600	3000	M8	100	180	52	600	B85321A2105A101	×
2 × 1.0	600	2500	M8	100	180	52	600	B85321A2205A101	×
2 × 2.0	600	2500	M8	100	180	52	600	B85321A2405A101	×
2 × 4.7	350	1700	M8	100	180	52	600	B85321A2945A101	×
V_R = 250 V AC, I_R= 200 A									
2 × 0.5	600	3000	M10	100	185	55	750	B85321A2105A201	×
2 × 1.0	600	2500	M10	100	185	55	750	B85321A2205A201	×
2 × 2.0	600	2500	M10	100	185	55	750	B85321A2405A201	×
2 × 4.7	350	1700	M10	100	185	55	750	B85321A2945A201	×
V_R = 250 V AC, I_R= 300 A									
2 × 0.5	600	3000	M12	100	195	60	800	B85321A2105A301	×
2 × 1.0	600	2500	M12	100	195	60	800	B85321A2205A301	×

C_R µF	V_R DC V	V_{test} DC V	Terminal	Dimensions I+1 mm	I_1-1	I_2-3	Approx. weight g	Ordering code	Approvals
2 × 2.0	600	2500	M12	100	195	60	800	B85321A2405A301	×
2 × 4.7	350	1700	M12	100	195	60	800	B85321A2945A301	×
V_R = 250 V AC, I_R= 400 A									
2 × 0.5	600	3000	M16	130	245	72	1250	B85321A2105A401	–
2 × 1.0	600	2500	M16	130	245	72	1250	B85321A2205A401	–
2 × 2.0	600	2500	M16	130	245	72	1250	B85321A2405A401	–
2 × 4.7	350	1650	M16	130	245	72	1250	B85321A2945A401	–
V_R = 250 V AC, I_R= 500 A									
2 × 0.5	600	3000	M18	130	250	75	1400	B85321A2105A501	–
2 × 1.0	600	2500	M18	130	250	75	1400	B85321A2205A501	–
2 × 2.0	600	2500	M18	130	250	75	1400	B85321A2405A501	–
2 × 4.7	350	1650	M18	130	250	75	1400	B85321A2945A501	–

× = Approval granted

Insertion loss (dB); typical values at 50 Ω

C_R µF	10 kHz	100 kHz	1 MHz	10 MHz	100 MHz	1 GHz
2 × 0.5	5	25	45	80	> 100	> 100
2 × 1.0	10	30	60	> 100	> 100	> 100
2 × 2.0	15	35	70	> 100	> 100	> 100
2 × 4.7	25	40	90	> 100	> 100	> 100

Dimensional drawing

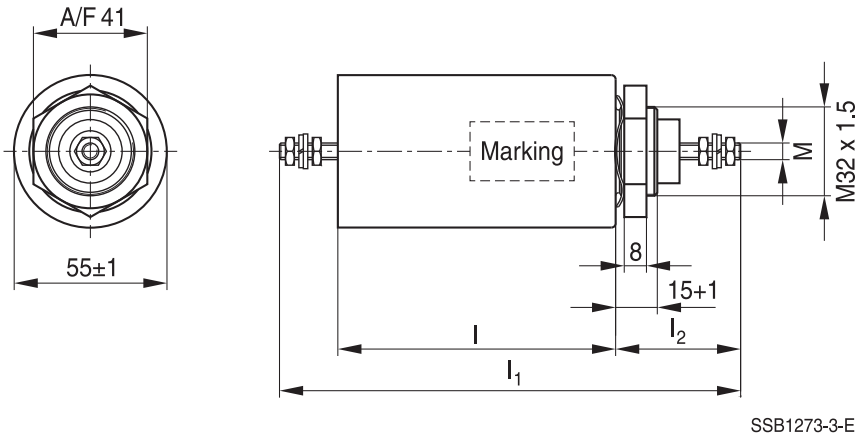

General tolerances according to ISO 2768-cL
Dimensions in mm

Thread	Tightening torque
M6	3 +0.5 Nm
M8	5 +0.5 Nm
M10	8 +2 Nm
M12	12 +2 Nm
M16	28 +2 Nm
M18	35 +2 Nm
M32 × 1.5	24 +2.5 Nm

Cautions and warnings

- Please note further advice in our website www.tdk-electronics.tdk.com/pemc_filters_gti
- It shall be ensured that only qualified persons (electricity specialists) are engaged on work such as planning, assembly, installation, operation, repair and maintenance. They must be provided with the corresponding documentation.
- Danger of electric shock: The products contain components that store an electric charge. Dangerous voltages can continue to exist at the product terminals for longer than five minutes even after the power has been switched off.
- The protective earth connections shall be the first to be made when the product is installed and secured against loosening by defined tightening torque. Remove them at last, when uninstalling. Depending on the magnitude of the leakage currents, the particular specifications for making the protective−earth connection must be observed.
- Impermissible overloading of the product, such as with circuits able to cause resonances, impermissible voltages at higher frequencies etc. can lead to bodily injury and death as well as cause substantial material damages (e.g. destruction of the product housing).
- The products must be protected in the application against impermissible exceeding of the rated currents by overcurrent protective devices.
- For leakage currents >10 mA, a fixed connection of the protective earth conductor to the public power grid is required. This means that connection via plug connectors is not permitted. The protective conductor must have a minimum cross-section of 10 mm^2 Cu or 16 mm^2 Al over its entire length. Alternatively, two separate protective conductors with the minimum cross-section specified in each case can also be connected.
- For leakage currents 3.5 mA < I_{LK} [a)] ≤ 10 mA, the following solutions are possible:
  - Stationary device with fixed connection
  - Stationary device with type B plug-in connection (industrial plug-in connection according to IEC 60309) and cross-section ≥ 2.5 mm^2
  - Stationary device with type A plug-in connection (non-industrial plug-in device) and additional second protective earth connection
  - Movable equipment with type A plug-in connection and additional second protective earth connection in premises with restricted access
- The products must be protected in the application against impermissible exceeding of the specification parameter.
- The converter output frequency must be within the specified range to avoid resonances and uncontrolled warming of the output chokes and output filters.
- The components can become very hot during operation, there is the risk of burns if touched. The product can remain hot for some time after the power is switched off!
- The products are only to be attached to the fixings or mounting holes provided for this purpose in accordance with the data sheet. It is not permitted for the product specified in the data sheet to assume a mechanical function in the final application, in particular any type of tension or pressure on the product must be prevented.
- With surface-treated sheets (e.g. galvanized), edge rust may occur due to the manufacturing process. This does not constitute a quality defect. Alternative materials are available if required.

a) I_{LK} = Leakage current

Display of ordering codes for TDK Electronics products

The ordering code for one and the same product can be represented differently in data sheets, data books, other publications, on the company website, or in order-related documents such as shipping notes, order confirmations and product labels. The varying representations of the ordering codes are due to different processes employed and do not affect the specifications of the respective products.
Detailed information can be found on the Internet under www.tdk-electronics.tdk.com/orderingcodes.

Symbols and terms

Symbol	English	German
α	Insertion loss	Einfügungsdämpfung
C_R	Rated capacitance	Bemessungskapazität
C_X	Capacitance X capacitor	Kapazität X-Kondensator
C_Y	Capacitance Y capacitor	Kapazität Y-Kondensator
ΔV	Voltage drop (input to output)	Spannungsabfall (Eingang zu Ausgang)
dv/dt	Rate of voltage rise	Spannungsanstiegsgeschwindigkeit
f	Frequency	Frequenz
f_M	Converter output frequency	Motorfrequenz
f_P	Pulse frequency	Pulsfrequenz
f_R	Rated frequency	Bemessungsfrequenz
f_{res}	Resonant frequency	Resonanzfrequenz
I_C	Current through capacitor	Strom durch Kondensator
I_{LK}	Filter leakage current	Filter-Ableitstrom
I_{max}	Maximum current	Maximalstrom
I_N	Nominal current	Nennstrom
I_{op}	Operating current (design current)	Betriebsstrom
I_{pk}	Rated peak withstand current	Bemessungsstoßstromfestigkeit
I_q	Capacitive reactive current	Kapazitiver Blindstrom
I_R	Rated current	Bemessungsstrom
I_S	Interference current	Störstrom
L	Inductance	Induktivität
L_R	Rated inductance	Bemessungsinduktivität
L_{stray}	Stray inductance	Streuinduktivität
P_L	Power loss	Verlustleistung
R	Resistance	Widerstand
R_{is}	Insulation resistance	Isolationswiderstand
R_{typ}	DC resistance, typical value	Gleichstromwiderstand typisch
T_A	Ambient temperature	Umgebungstemperatur
T_{max}	Upper category temperature	Obere Kategorietemperatur

Symbol	English	German
T_{min}	Lower category temperature	Untere Kategorietemperatur
T_R	Rated temperature	Bemessungstemperatur
v_k	Referred voltage drop in %	Bezogener Spannungsabfall in %
V_{eff}	RMS voltage	Effektivspannung
V_K	Voltage drop	Spannungsabfall
V_{LE}	Voltage line to earth; voltage line to ground	Spannung Phase zu Erdpotential
V_N	Nominal voltage	Nennspannung
V_R	Rated voltage	Bemessungsspannung
V_{peak}	Peak voltage	Spitzenspannung
V_{test}	Test voltage	Prüfspannung
V_X	Voltage over X capacitor	Spannung über X-Kondensator
V_Y	Voltage over Y capacitor	Spannung über Y-Kondensator
X_L	Inductive reactance	Induktiver Blindwiderstand
Z	Impedance	Scheinwiderstand
|Z|	Impedance, absolute value	Scheinwiderstand (Betragswert)

Important Notes

The following applies to all products named in this publication:

1 Some parts of this publication contain **statements about the suitability of our products for certain areas of application**. These statements are based on our knowledge of typical requirements that are often placed on our products in the areas of application concerned. We nevertheless expressly point out **that such statements cannot be regarded as binding statements about the suitability of our products for a particular customer application**. As a rule we are either unfamiliar with individual customer applications or less familiar with them than the customers themselves. For these reasons, it is always ultimately incumbent on the customer to check and decide whether a product with the properties described in the product specification is suitable for use in a particular customer application.

2 We also point out that **in individual cases, a malfunction of electronic components or failure before the end of their usual service life cannot be completely ruled out in the current state of the art, even if they are operated as specified**. In customer applications requiring a very high level of operational safety and especially in customer applications in which the malfunction or failure of an electronic component could endanger human life or health (e.g. in accident prevention or life-saving systems), it must therefore be ensured by means of suitable design of the customer application or other action taken by the customer (e.g. installation of protective circuitry or redundancy) that no injury or damage is sustained by third parties in the event of malfunction or failure of an electronic component.

3 **The warnings, cautions and product-specific notes must be observed**.

4 In order to satisfy certain technical requirements, **some of the products described in this publication may contain substances subject to restrictions in certain jurisdictions (e.g. because they are classed as hazardous)**. Useful information on this will be found in our Material Data Sheets on the Internet (www.tdk-electronics.tdk.com/material). Should you have any more detailed questions, please contact our sales offices.

5 We constantly strive to improve our products. Consequently, **the products described in this publication may change from time to time**. The same is true of the corresponding product specifications. Please check therefore to what extent product descriptions and specifications contained in this publication are still applicable before or when you place an order.
We also **reserve the right to discontinue production and delivery of products**. Consequently, we cannot guarantee that all products named in this publication will always be available. The aforementioned does not apply in the case of individual agreements deviating from the foregoing for customer-specific products.

6 Unless otherwise agreed in individual contracts, **all orders are subject to our General Terms and Conditions of Supply**.

7 **Our manufacturing sites serving the automotive business apply the IATF 16949 standard**. The IATF certifications confirm our compliance with requirements regarding the quality management system in the automotive industry. Referring to customer requirements and customer specific requirements (“CSR”) TDK always has and will continue to have the policy of respecting individual agreements. Even if IATF 16949 may appear to support the acceptance of unilateral requirements, we hereby like to emphasize that **only requirements mutually agreed upon can and will be implemented in our Quality Management System**. For clarification purposes we like to point out that obligations from IATF 16949 shall only become legally binding if individually agreed upon.

8 The trade names EPCOS, CarXield, CeraCharge, CeraDiode, CeraLink, CeraPad, CeraPlas, CSMP, CTVS, DeltaCap, DigiSiMic, FilterCap, FormFit, InsuGate, LeaXield, MediPlas, MiniBlue, MiniCell, MKD, MKK, ModCap, MotorCap, PCC, PhaseCap, PhaseCube, PhaseMod, PhiCap, PiezoBrush, PlasmaBrush, PowerHap, PQSine, PQvar, SIFERRIT, SIFI, SIKOREL, SilverCap, SIMDAD, SiMic, SIMID, SineFormer, SIOV, SurfIND, ThermoFuse, WindCap, XieldCap are **trademarks registered or pending** in Europe and in other countries. Further information will be found on the Internet at www.tdk-electronics.tdk.com/trademarks.

Release 2024-02