RR8 Series Rocker Switch





Specifications

Contact Arrangment: DPST
Electrical Rating:
Option C: 16A 125VAC [UR, cUR]
10A 250VAC [UR, cUR]
1/3HP 125/250VAC [UR, cUR]
10(4)A 250V~ T125/55 1E4 [ENEC]
Option 3: 10A 125VAC [UR, cUR]
6(2)A 250V~ T125/55 1E4 [ENEC]
Electrical Life: 10,000 Cycles [ENEC]
Contact Resistance: 35mΩ Max. at 50VAC
Insulation Resistance: 100MΩ Min. at 500VAC
Dielectric Strength: 1,500VAC for 1 Minute
Operating Temperature: -20°C to 105°C [UL, cUL]
-20°C to 125°C [ENEC]
Panel Cutout: Circular - 20mm Dia.

Features & Benefits

Aesthetically Designed
High Ratings with UL Approval
Full Illumination Options
UL File #E194579
ENEC File #ENEC-05499

Part Number Configurator

Series	Terminal	Function	Rating	Body Color	Actuator Color	Marking Color	Marking Type	Lens Style	Lens Color	Lamp Voltage
RR8	**1** - 4.8mm Tab	**2** - 2 Pole Off-On	**3** - 10A 125V **C** - 16A 125V	**1** - Black **2** - White **4** - Grey	**0** - Full Illumination **1** - Black **2** - White **4** - Grey **7** - Blue	**0** - None **1** - Black **2** - White **8** - Red	**0** - None **1** - I/O Vertical **3** - ON-OFF Vertical **R** - I/O Horizontal	**None** - Not Illuminated **1** - Full Illumination	**None** - Not Illuminated **0** - Clear **1** - Red **2** - Amber **3** - Green **4** - Blue	**None** - Not Illuminated **4** - 12V **6** - 125V **7** - 250V

Specifications subject to change without notice 10/6/2026

RR8 Series Rocker Switch - Body Dimensions

DPST - OFF-ON

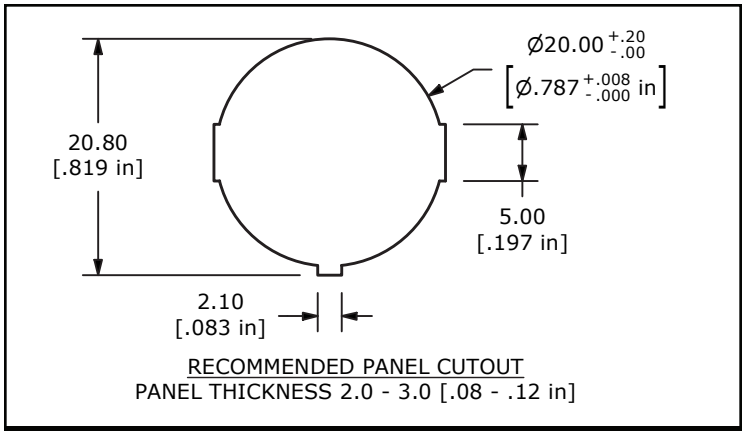

Panel Cutout

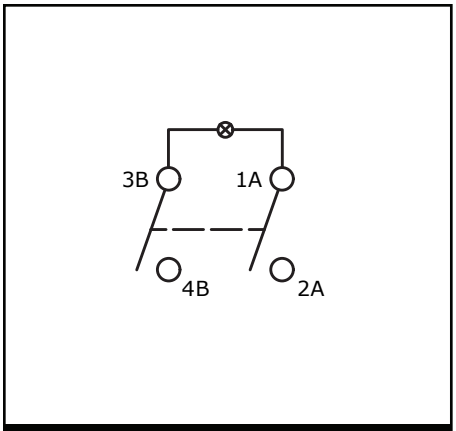

Schematic

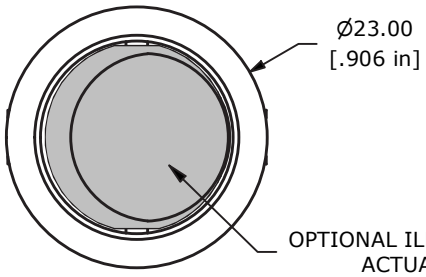

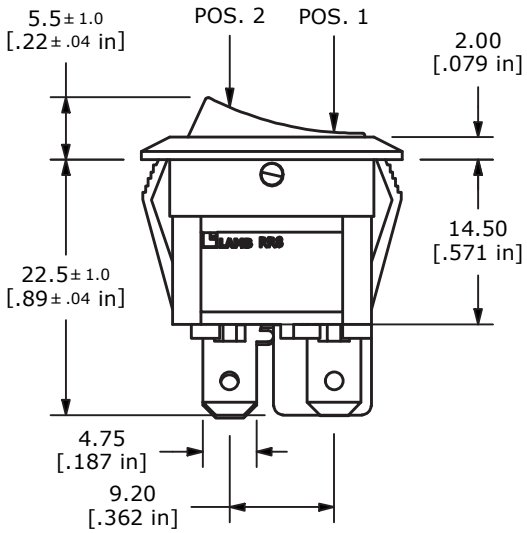

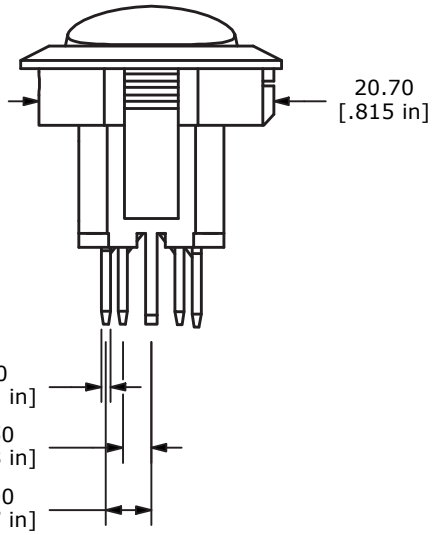

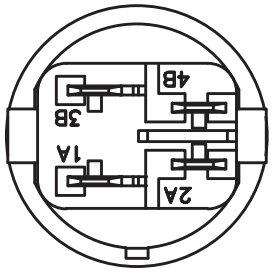

RR8 Series Rocker Switch

MARKING OPTIONS

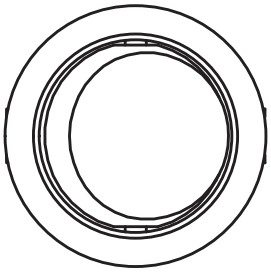

0 - NONE

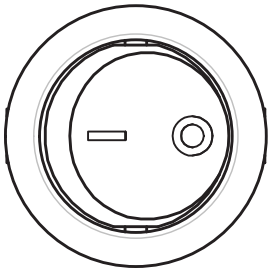

1 - I/O VERTICAL



3 - ON/OFF VERTICAL

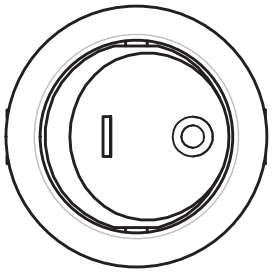

R - I/O HORIZONTAL