2018.09.27 16:18:42 +08'00'

APPROVED: _____

DATE: _____ TITLE: _____

Rev	AWO #	Description	Date	Appr
-		RELEASED	9/27/18	

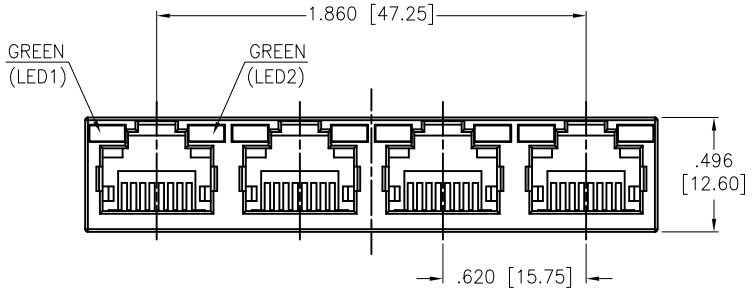

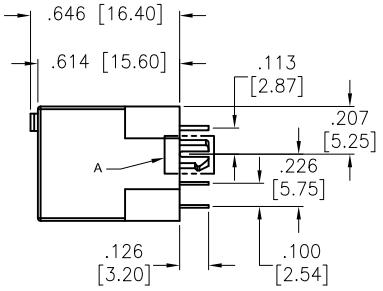

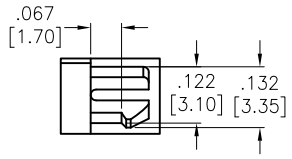

DETAIL A

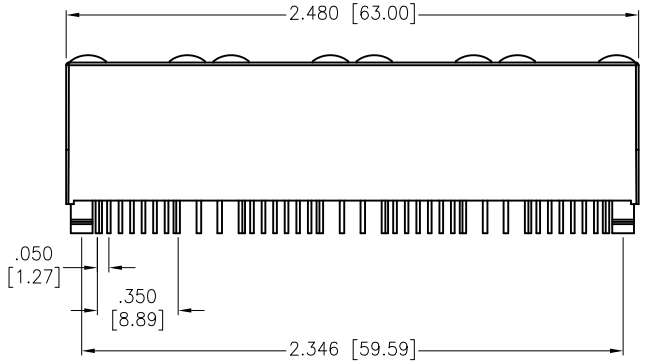

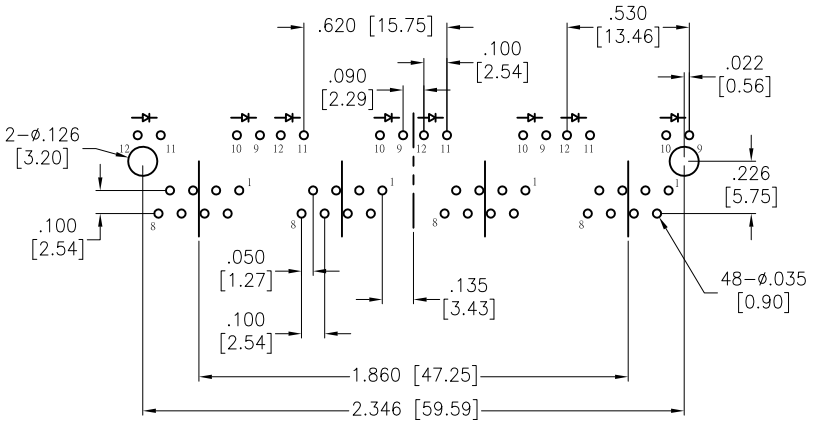

RECOMMENDED PCB LAYOUT

SPECIFICATIONS:

Material:
Insulator: Hi–temp thermoplastic, rated UL 94V–0
Insulator color: Pantone P114C, Yellow
Contacts: Phosphor Bronze

Cantacts Plating:
Round contact
Gold over Nickel underplate overall
Flat contact
Gold over Nickel underplate on contact area,
Tin over Nickel underplate on solder tails

Electrical:
Voltage rating: 150 VAC max
Current rating: 1.5 Amp max
Contact Resistance: 30 mohms max
Insulation resistance: 500 Mohms min
Dielectric withstanding voltage: 1,000 VAC

Temperature Rating:
Operating temperature: –40°C to +70°C

Environmental:
Lead free, RoHS compliant.

RoHS COMPLIANT

UNLESS OTHERWISE SPECIFIED
ALL DIMENSIONS ARE INCHES [MM]
TOLERANCES: EXCEPT AS NOTED

INCHES		HOLES	
.X	± .10	Ø.X	±.10
.XX	± .020	Ø.XX	±.015
.XXX	± .015	Ø.XXX	±.010

APPROVALS		DATE
DRAWN	HR	9/27/18
CHECKED	RC2	9/27/18
APPROVED		

ADAM TECH INTERCONNECTS
909 Rahway Avenue,
Union, NJ 07083
Phone: 908-687-5000
Fax: 908-687-5710

TITLE: MODULAR TELEPHONE JACK, GANGED 8P8C, W/ LED1 GREEN LED2 GREEN, YELLOW COLOR

SIZE	PART NO.	REV.
X	MTJG-4-888X1-P114C-HT-B	-

REF: S00297T | SCALE: NTS | SHEET 1 OF 1