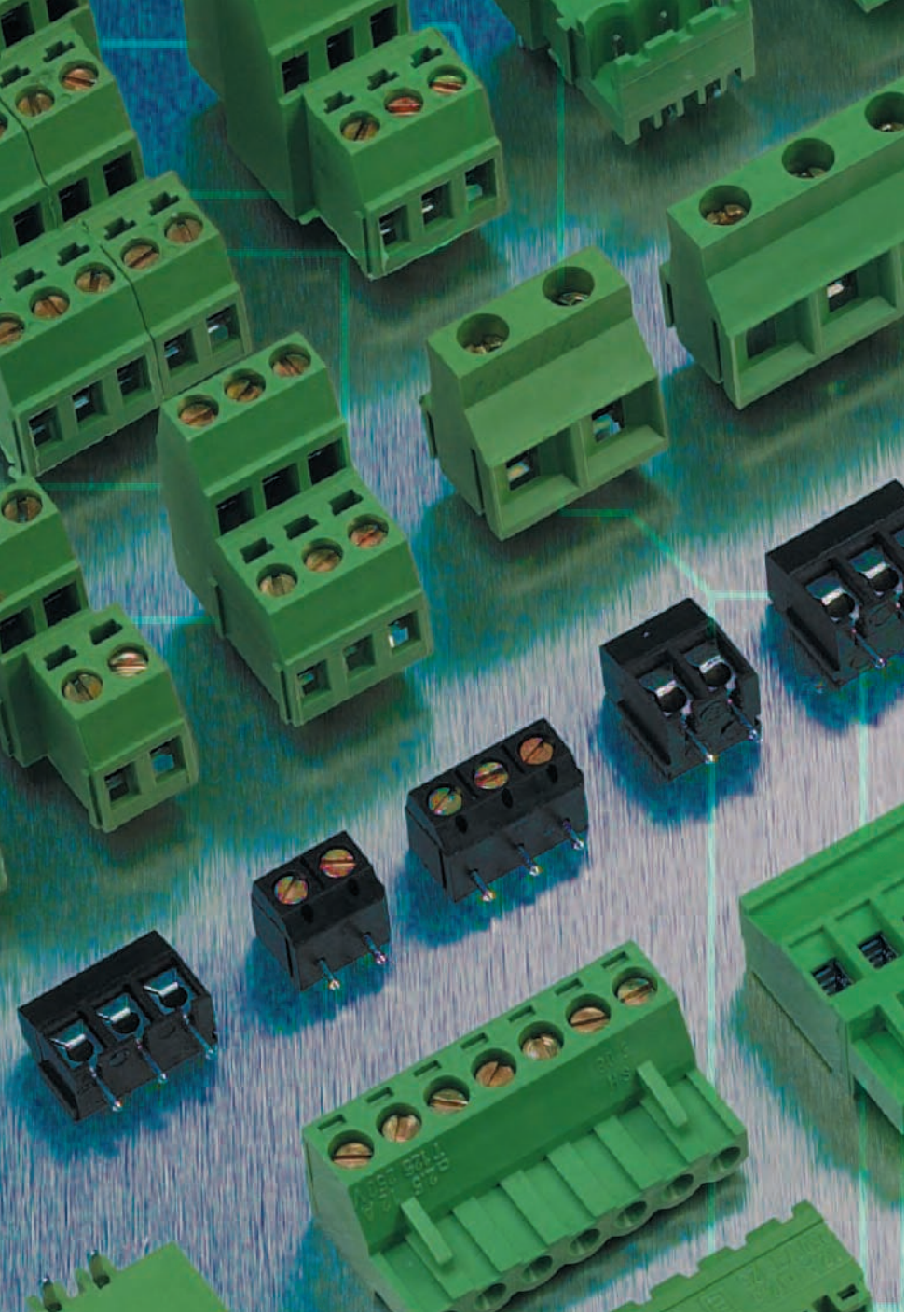

Altech is pleased to announce a new, more extensive printed circuit board terminal block line. This line offers the standard single and double level fixed and pluggable terminal blocks in metric and US pin spacings. However, this product line goes beyond our past standard offering. There is now a wider array of products within each pin spacing as well as new types of blocks such as 35°, reverse horizontal wire entry, and triple level fixed blocks, card edge connectors, panel feed through blocks, barrier strips, and plugs/headers with screw flanges. This product assortment combined with the new pricing structure makes this line extremely competitive.

Altech printed circuit board terminal blocks give you highly dependable connections without the need for wire lugs. Choose either tubular screw clamps or box clamps when economy is paramount or screw-cage clamps for heavy-duty applications. In each case, simply strip and insert the wire and tighten the screw. We recommend the use of ferrules, especially for export applications and whenever fine stranded wires must be terminated.

Our board mounted terminal blocks meet or exceed most international standards and are accepted worldwide. They're available in single, double and triple level configurations with both, millimeter and inch pin spacings. All leave mini footprints to save valuable real estate.

PRINTED CIRCUIT BOARD TERMINAL BLOCKS

Fixed



Our printed circuit board terminal blocks designed for fixed mounting offer high density, and maximum flexibility. Modular construction simplifies ordering and reduces inventory. Two-and 3-pole modules can be interlocked to create multipole assemblies. Altech can also supply ready-made assemblies tailored to your specification. Fixed-mount blocks are available with the economical tubular screw, box clamp or the screw-cage clamp and offer several wire entry options to facilitate wiring and increase accessibility.

Pluggable



The two-piece, plug and header design of our "pluggable" terminal blocks speed and simplify board replacement and reduce costly downtime and misconnections. No special tools are required. Headers are soldered into the board and accept the plugs, which are easily removed for fast, convenient board or device replacement. Choose single- mold designs for maximum strength. Or choose modular designs which are assembled from 2 and 3 pole modules when you need maximum flexibility to meet changing requirements. Both are available in a variety of configurations. Headers are available in vertical, and horizontal, single or double-level, with closed or open ends.

We offer pluggables with either screw-cage clamp termination for heavy duty requirements or with tubular screw termination and open headers for cost sensitive applications. We also offer a card edge connector for a quick, reliable and inexpensive connection.

Pin Spacing

Each clamp style is offered in metric and inch pin spacing. For your convenience, this catalog is organized by pin spacing. Fixed blocks are first, starting with the smallest pin spacing, then pluggable shown in each available spacing.

Connection

Altech's printed circuit board terminal blocks give you a choice between tubular screw, box clamp and screw-cage clamp designs:

- When your application calls for the highest reliability and frequent wire terminations, the screw-cage clamp should be your choice. As the clamp is tightened, the nickel-plated cage rises, pressing the wire firmly against the bus-bar, ensuring solid connections every time. Standard color is green.

- In the tubular screw and box clamp design, tightening the screw presses the conductor directly against the bottom of the clamp. These systems are ideal for cost sensitive, lighter duty applications or applications with infrequent wire terminations. Wire protectors are standard. Standard color is black for tubular screw and green for box clamp.

Materials

All of our printed circuit board terminal blocks feature precision formed or machined metal parts which are electrolytically plated. Nickel or tin-plated brass cage clamps or tubes, wire protectors, and tin-plated solder pins satisfy the most demanding requirements. Housings are precision-molded from self-extinguishing polyamid 6.8 or glass-filled polyester providing excellent strength and temperature resistance.

Marking

Altech offers marking to identify terminal inputs. Order Hot Stamp Imprinting for permanent marking of large quantities or custom marked terminals. Standard marking is consecutive numbers, left to right. This standard marking can be ordered by adding a suffix (i.e. MV-4612/iA would be a MV-4612 terminal block imprinted 1 through 12, left to right).

Custom imprints are also available, see page 177 for ordering information.

3.50mm Pin Spacing – Pluggable PCB Blocks

Pin Spacing: 3.50mm
Orientation: Horizontal Plug
Clamp Type: Screw Cage
Design: Single Mold

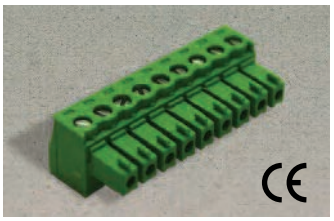

SHxx-3.50

ELECTRICAL

	Current	Voltage	Wire Range
cULus E178356	8A	300V	30-16AWG
IEC	8A	130V	1.5mm² Stranded 1.5mm² Solid

INSTALLATION DATA

Screw Size	M2	**PCB Hole Size**	–
Torque	0.25Nm (2.3 lbf-in.)	**Stripping Lgth.**	8mm

MATERIAL

Body	Polyamide	**Screw**	Galvanized Steel
Flammability Class	UL94V-0	**Terminal**	Tin-Plated Brass
Temperature Limit	105°C UL 125°C IEC	**Clamp**	Nickeled Brass
Color	Green		

No. Poles	Cat. #	Length (mm)	Std. Pk.
2	SH02-3.50	7.0	100
3	SH03-3.50	10.5	100
4	SH04-3.50	14.0	50
5	SH05-3.50	17.5	50
6	SH06-3.50	21.0	50
7	SH07-3.50	24.5	50
8	SH08-3.50	28.0	50
9	SH09-3.50	31.5	50
10	SH10-3.50	35.0	50
11	SH11-3.50	38.5	50
12	SH12-3.50	42.0	50
13	SH13-3.50	45.5	20
14	SH14-3.50	49.0	20
15	SH15-3.50	52.5	20
16	SH16-3.50	56.0	20
17	SH17-3.50	59.5	20
18	SH18-3.50	63.0	20
19	SH19-3.50	66.5	20
20	SH20-3.50	70.0	20
21	SH21-3.50	73.5	20
22	SH22-3.50	77.0	20
23	SH23-3.50	80.5	20
24	SH24-3.50	84.0	20

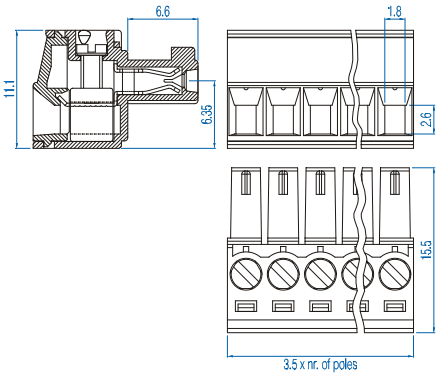

Pin Spacing: 3.50mm
Orientation: Horizontal Plug with Screw Flange
Clamp Type: –
Design: Single Mold

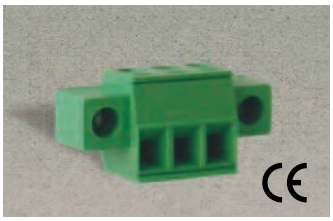

SHxx-3.50-K

ELECTRICAL

	Current	Voltage	Wire Range
cULus E178356	8A	300V	30-16AWG
IEC	8A	130V	1.5mm² Stranded 1.5mm² Solid

INSTALLATION DATA

Screw Size	M2	**PCB Hole Size**	–
Torque	0.25Nm (2.3 lbf-in.)	**Stripping Lgth.**	8mm

MATERIAL

Body	Polyamide	**Screw**	Galvanized Steel
Flammability Class	UL94V-0	**Terminal**	Tin-Plated Brass
Temperature Limit	105°C UL 125°C IEC	**Clamp**	Nickeled Brass
Color	Green		

No. Poles	Cat. #	Length (mm)	Std. Pk.
2	SH02-3.50-K	17.4	100
3	SH03-3.50-K	20.9	100
4	SH04-3.50-K	24.4	50
5	SH05-3.50-K	27.9	50
6	SH06-3.50-K	31.4	50
7	SH07-3.50-K	34.9	50
8	SH08-3.50-K	38.4	50
9	SH09-3.50-K	41.9	50
10	SH10-3.50-K	45.4	50
11	SH11-3.50-K	48.9	50
12	SH12-3.50-K	52.4	50
13	SH13-3.50-K	55.9	20
14	SH14-3.50-K	59.4	20
15	SH15-3.50-K	62.9	20
16	SH16-3.50-K	66.4	20
17	SH17-3.50-K	69.9	20
18	SH18-3.50-K	73.4	20
19	SH19-3.50-K	76.9	20
20	SH20-3.50-K	80.4	20
21	SH21-3.50-K	83.9	20
22	SH22-3.50-K	87.4	20

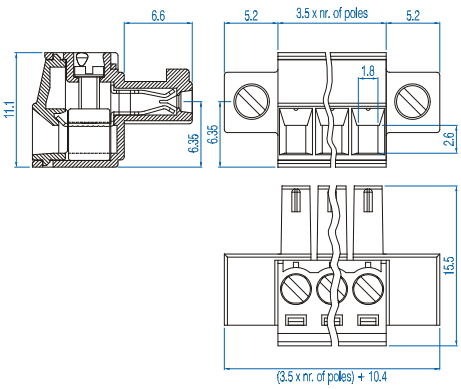

Pin Spacing: 3.50mm
Orientation: Vertical
Clamp Type: Rising Clamp
Design: Single Mold

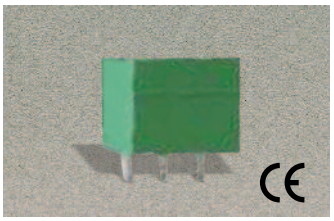

PVPxx-3.50

ELECTRICAL

	Current	Voltage	Wire Range
cULus E178356	8A	300V	–
IEC	8A	130V	–

INSTALLATION DATA

Screw Size	–	**PCB Hole Size**	1.3mm
Torque	–	**Stripping Lgth.**	–

MATERIAL

Body	Polyamide	**Screw**	–
Flammability Class	UL94V-0	**Terminal**	Tin-Plated Brass
Temperature Limit	105°C UL 125°C IEC	**Clamp**	–
Color	Green		

No. Poles	Cat. #	Length (mm)	Std. Pk.
2	PVP02-3.50	7.8	100
3	PVP03-3.50	11.3	100
4	PVP04-3.50	14.8	50
5	PVP05-3.50	18.3	50
6	PVP06-3.50	21.8	50
7	PVP07-3.50	25.3	50
8	PVP08-3.50	28.8	50
9	PVP09-3.50	32.3	50
10	PVP10-3.50	35.8	50
11	PVP11-3.50	39.3	50
12	PVP12-3.50	42.8	50
13	PVP13-3.50	46.3	20
14	PVP14-3.50	49.8	20
15	PVP15-3.50	53.3	20
16	PVP16-3.50	56.8	20
17	PVP17-3.50	60.3	20
18	PVP18-3.50	63.8	20
19	PVP19-3.50	67.3	20
20	PVP20-3.50	70.8	20
21	PVP21-3.50	74.3	20
22	PVP22-3.50	77.8	20
23	PVP23-3.50	81.3	20
24	PVP24-3.50	84.8	20

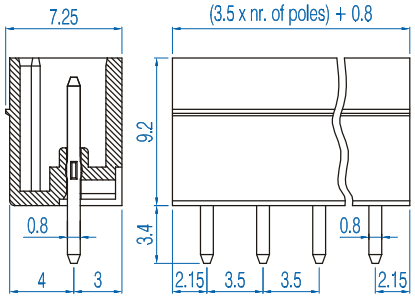

Pin Spacing: 3.50mm
Orientation: Horizontal Header
Clamp Type: –
Design: Single Mold - Closed End

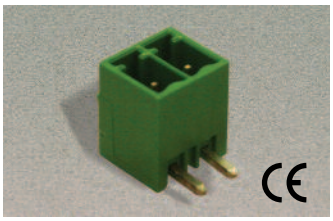

PHPxx-3.50

ELECTRICAL

	Current	Voltage	Wire Range
cULus E178356	8A	300V	–
IEC	8A	130V	–

INSTALLATION DATA

Screw Size	–	**PCB Hole Size**	1.3mm
Torque	–	**Stripping Lgth.**	–

MATERIAL

Body	Polyamide	**Screw**	–
Flammability Class	UL94V-0	**Terminal**	Tin-Plated Brass
Temperature Limit	105°C UL 125°C IEC	**Clamp**	–
Color	Green		

No. Poles	Cat. #	Length (mm)	Std. Pk.
2	PHP02-3.50	7.8	100
3	PHP03-3.50	11.3	100
4	PHP04-3.50	14.8	50
5	PHP05-3.50	18.3	50
6	PHP06-3.50	21.8	50
7	PHP07-3.50	25.3	50
8	PHP08-3.50	28.8	50
9	PHP09-3.50	32.3	50
10	PHP10-3.50	35.8	50
11	PHP11-3.50	39.3	50
12	PHP12-3.50	42.8	50
13	PHP13-3.50	46.3	20
14	PHP14-3.50	49.8	20
15	PHP15-3.50	53.3	20
16	PHP16-3.50	56.8	20
17	PHP17-3.50	60.3	20
18	PHP18-3.50	63.8	20
19	PHP19-3.50	67.3	20
20	PHP20-3.50	70.8	20
21	PHP21-3.50	74.3	20
22	PHP22-3.50	77.8	20
23	PHP23-3.50	81.3	20
24	PHP24-3.50	84.8	20

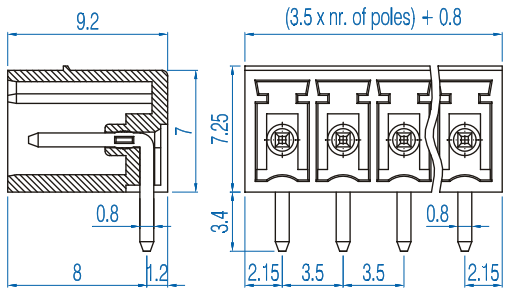

3.50mm Pin Spacing – Pluggable PCB Blocks

Pin Spacing: 3.50mm
Orientation: Vertical Header with Screw Flange
Clamp Type: –
Design: Single Mold

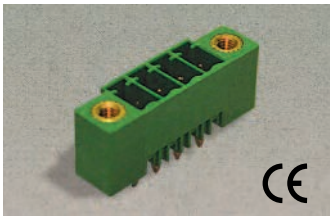

PVxx-3.50-K

ELECTRICAL

	Current	Voltage	Wire Range
c UL us E178356	8A	300V	–
IEC	8A	130V	–

INSTALLATION DATA

Screw Size	–	**PCB Hole Size**	1.3mm
Torque	–	**Stripping Lgth.**	–

MATERIAL

Body	Polyamide	**Screw**	–
Flammability Class	UL94V-0	**Terminal**	Tin-Plated Brass
Temperature Limit	105°C UL 125°C IEC	**Clamp**	–
Color	Green		

No. Poles	Cat. #	Length (mm)	Std. Pk.
2	PV02-3.50-K	17.4	100
3	PV03-3.50-K	20.9	100
4	PV04-3.50-K	24.4	50
5	PV05-3.50-K	27.9	50
6	PV06-3.50-K	31.4	50
7	PV07-3.50-K	34.9	50
8	PV08-3.50-K	38.4	50
9	PV09-3.50-K	41.9	50
10	PV10-3.50-K	45.4	50
11	PV11-3.50-K	48.9	50
12	PV12-3.50-K	52.4	50
13	PV13-3.50-K	55.9	20
14	PV14-3.50-K	59.4	20
15	PV15-3.50-K	62.9	20
16	PV16-3.50-K	66.4	20
17	PV17-3.50-K	69.9	20
18	PV18-3.50-K	73.4	20
19	PV19-3.50-K	76.9	20
20	PV20-3.50-K	80.4	20
21	PV21-3.50-K	83.9	20
22	PV22-3.50-K	87.4	20

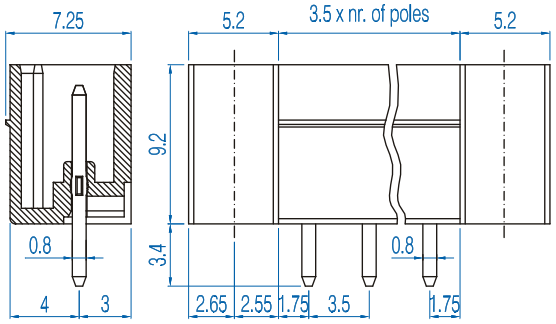

Pin Spacing: 3.50mm
Orientation: Horizontal Header with Screw Flange
Clamp Type: –
Design: Single Mold

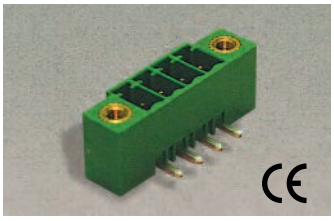

PHxx-3.50-K

ELECTRICAL

	Current	Voltage	Wire Range
c UL us E178356	8A	300V	–
IEC	8A	130V	–

INSTALLATION DATA

Screw Size	–	**PCB Hole Size**	1.3mm
Torque	–	**Stripping Lgth.**	–

MATERIAL

Body	Polyamide	**Screw**	–
Flammability Class	UL94V-0	**Terminal**	Tin-Plated Brass
Temperature Limit	105°C UL 125°C IEC	**Clamp**	–
Color	Green		

No. Poles	Cat. #	Length (mm)	Std. Pk.
2	PH02-3.50-K	17.4	100
3	PH03-3.50-K	20.9	100
4	PH04-3.50-K	24.4	50
5	PH05-3.50-K	27.9	50
6	PH06-3.50-K	31.4	50
7	PH07-3.50-K	34.9	50
8	PH08-3.50-K	38.4	50
9	PH09-3.50-K	41.9	50
10	PH10-3.50-K	45.4	50
11	PH11-3.50-K	48.9	50
12	PH12-3.50-K	52.4	50
13	PH13-3.50-K	55.9	20
14	PH14-3.50-K	59.4	20
15	PH15-3.50-K	62.9	20
16	PH16-3.50-K	66.4	20
17	PH17-3.50-K	69.9	20
18	PH18-3.50-K	73.4	20
19	PH19-3.50-K	76.9	20
20	PH20-3.50-K	80.4	20
21	PH21-3.50-K	83.9	20
22	PH22-3.50-K	87.4	20

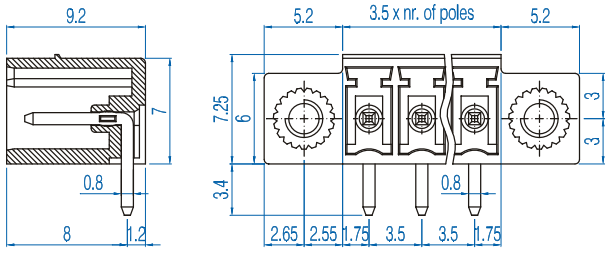

3.81mm Pin Spacing – Pluggable PCB Blocks

Pin Spacing: 3.81mm
Orientation: Horizontal Plug
Clamp Type: Screw Cage
Design: Single Mold

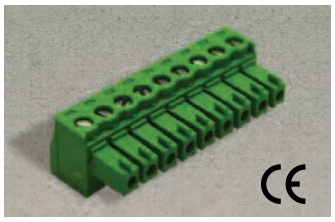

SHxx-3.81

ELECTRICAL

	Current	Voltage	Wire Range
cULus E178356	8A	300V	30-16AWG
IEC	8A	130V	1.5mm² Stranded 1.5mm² Solid

INSTALLATION DATA

Screw Size	M2	**PCB Hole Size**	–
Torque	0.2Nm (1.8lbf-in)	**Stripping Lgth.**	8mm

MATERIAL

Body	Polyamide	**Screw**	Galvanized Steel
Flammability Class	UL94V-0	**Terminal**	Tin-Plated Brass
Temperature Limit	105°C UL 125°C IEC	**Clamp**	Nickeled Brass
Color	Green		

No. Poles	Cat. #	Length (mm)	Std. Pk.
2	SH02-3.81	8.4	100
3	SH03-3.81	12.2	100
4	SH04-3.81	16.0	50
5	SH05-3.81	19.9	50
6	SH06-3.81	23.7	50
7	SH07-3.81	27.5	50
8	SH08-3.81	31.3	50
9	SH09-3.81	35.1	50
10	SH10-3.81	38.9	50
11	SH11-3.81	42.7	50
12	SH12-3.81	46.5	50
13	SH13-3.81	50.3	20
14	SH14-3.81	54.1	20
15	SH15-3.81	58.0	20
16	SH16-3.81	61.8	20
17	SH17-3.81	65.6	20
18	SH18-3.81	69.4	20
19	SH19-3.81	73.2	20
20	SH20-3.81	77.0	20
21	SH21-3.81	80.8	20
22	SH22-3.81	84.6	20
23	SH23-3.81	88.4	20
24	SH24-3.81	92.2	20

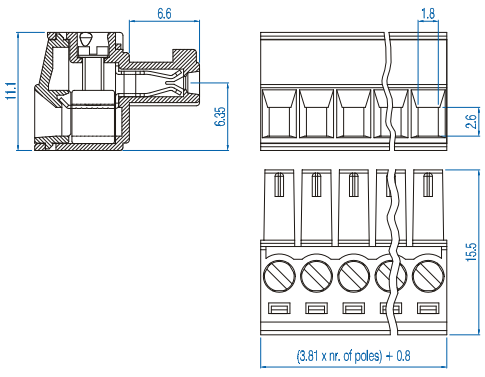

Pin Spacing: 3.81mm
Orientation: Horizontal Plug with Screw Flange
Clamp Type: Screw Cage
Design: Single Mold

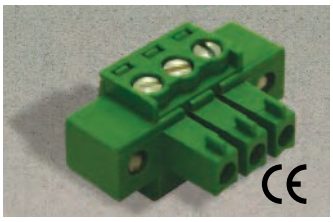

SHxx-3.81-K

ELECTRICAL

	Current	Voltage	Wire Range
cULus E178356	8A	300V	30-16AWG
IEC	8A	130V	1.5mm² Stranded 1.5mm² Solid

INSTALLATION DATA

Screw Size	M2	**PCB Hole Size**	–
Torque	0.2Nm (1.8lbf-in)	**Stripping Lgth.**	8mm

MATERIAL

Body	Polyamide	**Screw**	Galvanized Steel
Flammability Class	UL94V-0	**Terminal**	Tin-Plated Brass
Temperature Limit	105°C UL 125°C IEC	**Clamp**	Nickeled Brass
Color	Green		

No. Poles	Cat. #	Length (mm)	Std. Pk.
2	SH02-3.81-K	18.0	100
3	SH03-3.81-K	21.8	100
4	SH04-3.81-K	25.6	50
5	SH05-3.81-K	29.5	50
6	SH06-3.81-K	33.3	50
7	SH07-3.81-K	37.1	50
8	SH08-3.81-K	40.9	50
9	SH09-3.81-K	44.7	50
10	SH10-3.81-K	48.5	50
11	SH11-3.81-K	52.3	50
12	SH12-3.81-K	56.1	50
13	SH13-3.81-K	59.9	20
14	SH14-3.81-K	63.7	20
15	SH15-3.81-K	67.6	20
16	SH16-3.81-K	71.4	20
17	SH17-3.81-K	75.2	20
18	SH18-3.81-K	79.0	20
19	SH19-3.81-K	82.8	20
20	SH20-3.81-K	86.6	20
21	SH21-3.81-K	90.4	20
22	SH22-3.81-K	94.2	20

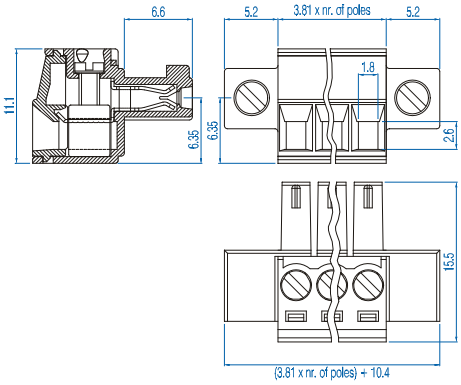

3.81mm Pin Spacing – Pluggable PCB Blocks

Pin Spacing: 3.81mm
Orientation: Vertical Header
Clamp Type: –
Design: Single Mold - Closed End

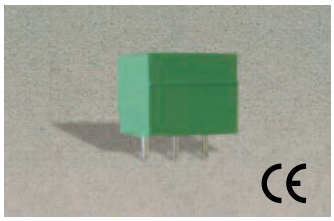

PVPxx-3.81

ELECTRICAL

	Current	Voltage	Wire Range
cULus E178356	8A	300V	–
IEC	8A	250V	–

INSTALLATION DATA

Screw Size	–	**PCB Hole Size**	1.3mm
Torque	–	**Stripping Lgth.**	–

MATERIAL

Body	Polyamide	**Screw**	–
Flammability Class	UL94V-0	**Terminal**	Tin-Plated Brass
Temperature Limit	105°C UL 125°C IEC	**Clamp**	–
Color	Green		

No. Poles	Cat. #	Length (mm)	Std. Pk.
2	PVP02-3.81	8.4	100
3	PVP03-3.81	12.2	100
4	PVP04-3.81	16.0	50
5	PVP05-3.81	19.9	50
6	PVP06-3.81	23.7	50
7	PVP07-3.81	27.5	50
8	PVP08-3.81	31.3	50
9	PVP09-3.81	35.1	50
10	PVP10-3.81	38.9	50
11	PVP11-3.81	42.7	50
12	PVP12-3.81	46.5	50
13	PVP13-3.81	50.3	20
14	PVP14-3.81	54.1	20
15	PVP15-3.81	58.0	20
16	PVP16-3.81	61.8	20
17	PVP17-3.81	65.6	20
18	PVP18-3.81	69.4	20
19	PVP19-3.81	73.2	20
20	PVP20-3.81	77.0	20
21	PVP21-3.81	80.8	20
22	PVP22-3.81	84.6	20
23	PVP23-3.81	88.4	20
24	PVP24-3.81	92.2	20

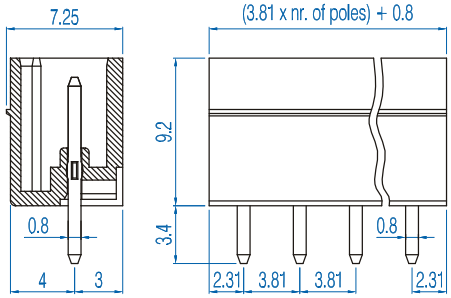

Pin Spacing: 3.81mm
Orientation: Horizontal Header
Clamp Type: –
Design: Single Mold - Closed End

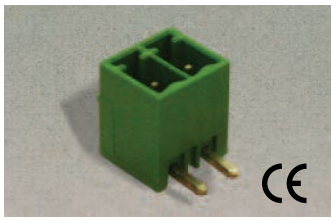

PHPxx-3.81

ELECTRICAL

	Current	Voltage	Wire Range
cULus E178356	8A	300V	–
IEC	8A	250V	–

INSTALLATION DATA

Screw Size	–	**PCB Hole Size**	1.3mm
Torque	–	**Stripping Lgth.**	–

MATERIAL

Body	Polyamide	**Screw**	–
Flammability Class	UL94V-0	**Terminal**	Tin-Plated Brass
Temperature Limit	105°C UL 125°C IEC	**Clamp**	–
Color	Green		

No. Poles	Cat. #	Length (mm)	Std. Pk.
2	PHP02-3.81	8.4	100
3	PHP03-3.81	12.2	100
4	PHP04-3.81	16.0	50
5	PHP05-3.81	19.9	50
6	PHP06-3.81	23.7	50
7	PHP07-3.81	27.5	50
8	PHP08-3.81	31.3	50
9	PHP09-3.81	35.1	50
10	PHP10-3.81	38.9	50
11	PHP11-3.81	42.7	50
12	PHP12-3.81	46.5	50
13	PHP13-3.81	50.3	20
14	PHP14-3.81	54.1	20
15	PHP15-3.81	58.0	20
16	PHP16-3.81	61.8	20
17	PHP17-3.81	65.6	20
18	PHP18-3.81	69.4	20
19	PHP19-3.81	73.2	20
20	PHP20-3.81	77.0	20
21	PHP21-3.81	80.8	20
22	PHP22-3.81	84.6	20
23	PHP23-3.81	88.4	20
24	PHP24-3.81	92.2	20

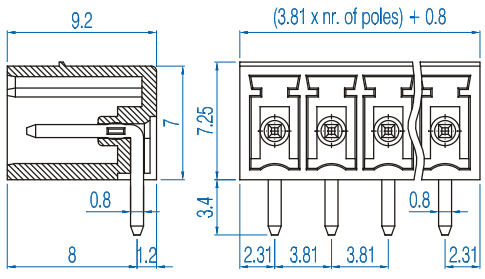

Pin Spacing: 3.81mm
Orientation: Vertical Header with Screw Flange
Clamp Type: –
Design: Single Mold

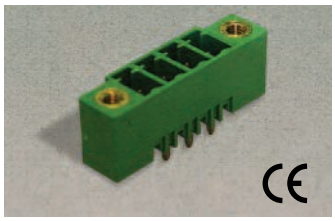

PVxx-3.81-K

ELECTRICAL

	Current	Voltage	Wire Range
cULus E178356	8A	300V	–
IEC	8A	130V	–

INSTALLATION DATA

Screw Size	–	**PCB Hole Size**	1.3mm
Torque	–	**Stripping Lgth.**	–

MATERIAL

Body	Polyamide	**Screw**	–
Flammability Class	UL94V-0	**Terminal**	Tin-Plated Brass
Temperature Limit	105°C UL 125°C IEC	**Clamp**	–
Color	Green		

No. Poles	Cat. #	Length (mm)	Std. Pk.
2	PV2-3.81-K	18.0	100
3	PV03-3.81-K	21.8	100
4	PV04-3.81-K	25.6	50
5	PV05-3.81-K	29.5	50
6	PV06-3.81-K	33.3	50
7	PV07-3.81-K	37.1	50
8	PV08-3.81-K	40.9	50
9	PV09-3.81-K	44.7	50
10	PV10-3.81-K	48.5	50
11	PV11-3.81-K	52.3	50
12	PV12-3.81-K	56.1	50
13	PV13-3.81-K	59.9	20
14	PV14-3.81-K	63.7	20
15	PV15-3.81-K	67.6	20
16	PV16-3.81-K	71.4	20
17	PV17-3.81-K	75.2	20
18	PV18-3.81-K	79.0	20
19	PV19-3.81-K	82.8	20
20	PV20-3.81-K	86.6	20
21	PV21-3.81-K	90.4	20
22	PV22-3.81-K	94.2	20

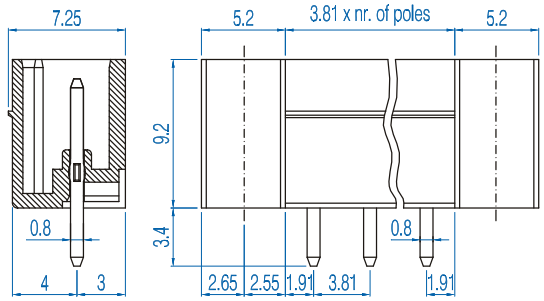

Pin Spacing: 3.81mm
Orientation: Horizontal Header with Screw Flange
Clamp Type: –
Design: Single Mold

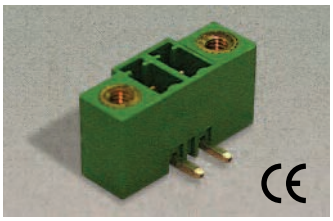

PHxx-3.81-K

ELECTRICAL

	Current	Voltage	Wire Range
cULus E178356	8A	300V	–
IEC	8A	130V	–

INSTALLATION DATA

Screw Size	–	**PCB Hole Size**	1.3mm
Torque	–	**Stripping Lgth.**	–

MATERIAL

Body	Polyamide	**Screw**	–
Flammability Class	UL94V-0	**Terminal**	Tin-Plated Brass
Temperature Limit	105°C UL 125°C IEC	**Clamp**	–
Color	Green		

No. Poles	Cat. #	Length (mm)	Std. Pk.
2	PH02-3.81-K	18.0	100
3	PH03-3.81-K	21.8	100
4	PH04-3.81-K	25.6	50
5	PH05-3.81-K	29.5	50
6	PH06-3.81-K	33.3	50
7	PH07-3.81-K	37.1	50
8	PH08-3.81-K	40.9	50
9	PH09-3.81-K	44.7	50
10	PH10-3.81-K	48.5	50
11	PH11-3.81-K	52.3	50
12	PH12-3.81-K	56.1	50
13	PH13-3.81-K	59.9	20
14	PH14-3.81-K	63.7	20
15	PH15-3.81-K	67.6	20
16	PH16-3.81-K	71.4	20
17	PH17-3.81-K	75.2	20
18	PH18-3.81-K	79.0	20
19	PH19-3.81-K	82.8	20
20	PH20-3.81-K	86.6	20
21	PH21-3.81-K	90.4	20
22	PH22-3.81-K	94.2	20

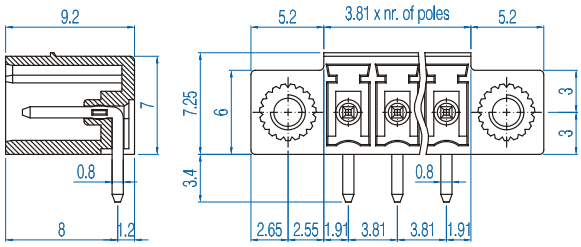

5.00mm Pin Spacing – Pluggable PCB Blocks

Pin Spacing: 5.00mm*
Orientation: Horizontal Plug
Clamp Type: Tubular Screw with Wire Protector
Design: Modular

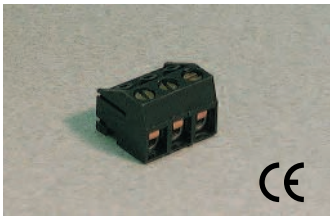

SHSxx-5.00

ELECTRICAL

	Current	Voltage	Wire Range
c UL us E178356	10A	300V	30-16AWG

INSTALLATION DATA

Screw Size	M2.6	**PCB Hole Size**	–
Torque	0.5Nm (4.5 lbf-in.)	**Stripping Lgth.**	6.0mm

MATERIAL

Body	Glass-Filled Polyester	**Screw**	Galvanized Steel
Flammability Class	UL94V-0	**Terminal**	Cu-Be
Temperature Limit	120˚C	**Wire Protector**	Tin-Plated Brass
Color	Black		

No. Poles	Cat. #	Length (mm)	Std. Pk.
2	SHS02-5.00	10.0	100
3	SHS03-5.00	15.0	100
4	SHS04-5.00	20.0	50
5	SHS05-5.00	25.0	50
6	SHS06-5.00	30.0	50
7	SHS07-5.00	35.0	50
8	SHS08-5.00	40.0	50
9	SHS09-5.00	45.0	50
10	SHS10-5.00	50.0	50
11	SHS11-5.00	55.0	50
12	SHS12-5.00	60.0	50
13	SHS13-5.00	65.0	20
14	SHS14-5.00	70.0	20
15	SHS15-5.00	75.0	20
16	SHS16-5.00	80.0	20
17	SHS17-5.00	85.0	20
18	SHS18-5.00	90.0	20
19	SHS19-5.00	95.0	20
20	SHS20-5.00	100.0	20
21	SHS21-5.00	105.0	20
22	SHS22-5.00	110.0	20
23	SHS23-5.00	115.0	20
24	SHS24-5.00	120.0	20

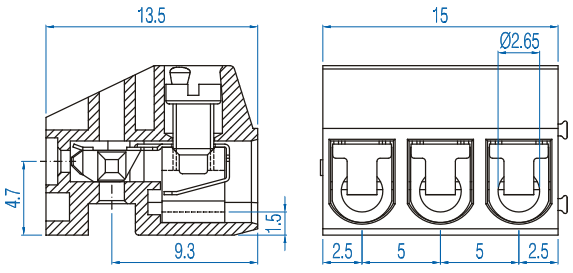

* Also available in 10.00mm pin spacing

Pin Spacing: 5.00mm*
Orientation: Vertical-Pin Header
Clamp Type: –
Design: Breakaway

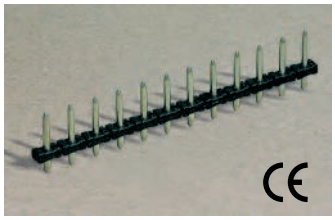

PVSxx-5.00

ELECTRICAL

	Current	Voltage	Wire Range
c UL us E178356	10A	300V	–

INSTALLATION DATA

Screw Size	–	**PCB Hole Size**	1.5mm
Torque	–	**Stripping Lgth.**	–

MATERIAL

Body	Polyamide	**Screw**	–
Flammability Class	UL94V-0	**Terminal**	Tin-Plated Brass
Temperature Limit	125˚C	**Clamp**	–
Color	Black		

No. Poles	Cat. #	Length (mm)	Std. Pk.
2	PVS02-5.00	10.0	100
3	PVS03-5.00	15.0	100
4	PVS04-5.00	20.0	50
5	PVS05-5.00	25.0	50
6	PVS06-5.00	30.0	50
7	PVS07-5.00	35.0	50
8	PVS08-5.00	40.0	50
9	PVS09-5.00	45.0	50
10	PVS10-5.00	50.0	50
11	PVS11-5.00	55.0	50
12	PVS12-5.00	60.0	50
13	PVS13-5.00	65.0	20
14	PVS14-5.00	70.0	20
15	PVS15-5.00	75.0	20
16	PVS16-5.00	80.0	20
17	PVS17-5.00	85.0	20
18	PVS18-5.00	90.0	20
19	PVS19-5.00	95.0	20
20	PVS20-5.00	100.0	20
21	PVS21-5.00	105.0	20
22	PVS22-5.00	110.0	20
23	PVS23-5.00	115.0	20
24	PVS24-5.00	120.0	20

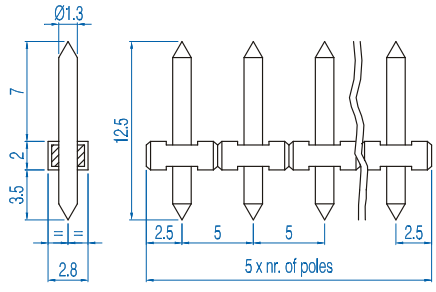

* Also available in 10.00mm pin spacing

5.00mm Pin Spacing – Pluggable PCB Blocks

Pin Spacing: 5.00mm
Orientation: Horizontal Plug
Clamp Type: Screw Cage
Design: Single Mold

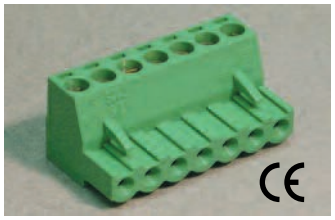

SHxx-5.00

ELECTRICAL

	Current	Voltage	Wire Range
c UL us E178356	12A	300V	30-14AWG
IEC	16A	450V	2.5mm² Stranded 4.0mm² Solid

INSTALLATION DATA

Screw Size	M3	**PCB Hole Size**	–
Torque	0.5Nm (4.5 lbf-in.)	**Stripping Lgth.**	7.5mm

MATERIAL

Body	Polyamide	**Screw**	Galvanized Steel
Flammability Class	UL94V-0	**Terminal**	Nickeled Brass
Temperature Limit	105˚C UL 125˚C IEC	**Clamp**	Nickeled Brass
Color	Green		

No. Poles	Cat. #	Length (mm)	Std. Pk.
2	SH02-5.00	10.0	100
3	SH03-5.00	15.0	100
4	SH04-5.00	20.0	50
5	SH05-5.00	25.0	50
6	SH06-5.00	30.0	50
7	SH07-5.00	35.0	50
8	SH08-5.00	40.0	50
9	SH09-5.00	45.0	50
10	SH10-5.00	50.0	50
11	SH11-5.00	55.0	50
12	SH12-5.00	60.0	50
13	SH13-5.00	65.0	20
14	SH14-5.00	70.0	20
15	SH15-5.00	75.0	20
16	SH16-5.00	80.0	20
17	SH17-5.00	85.0	20
18	SH18-5.00	90.0	20
19	SH19-5.00	95.0	20
20	SH20-5.00	100.0	20
21	SH21-5.00	105.0	20
22	SH22-5.00	110.0	20
23	SH23-5.00	115.0	20
24	SH24-5.00	120.0	20

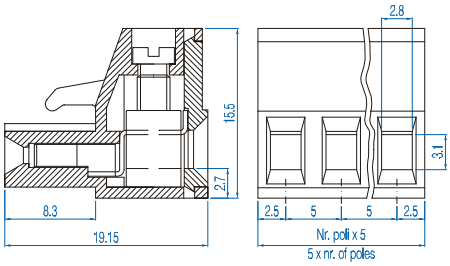

Pin Spacing: 5.00mm
Orientation: Vertical Plug
Clamp Type: Screw Cage
Design: Single Mold

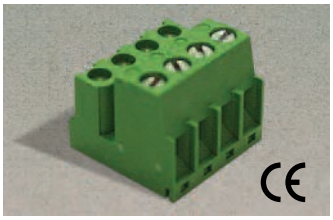

SVRxx-5.00

ELECTRICAL

	Current	Voltage	Wire Range
c UL us E178356	12A	300V	30-14AWG
IEC	16A	250V	2.5mm² Stranded 4.0mm² Solid

INSTALLATION DATA

Screw Size	M3	**PCB Hole Size**	–
Torque	0.5Nm (4.5 lbf-in.)	**Stripping Lgth.**	7.5mm

MATERIAL

Body	Polyamide	**Screw**	Galvanized Steel
Flammability Class	UL94V-0	**Terminal**	Tin-Plated Brass
Temperature Limit	105˚C UL 125˚C IEC	**Clamp**	Nickeled Brass
Color	Green		

No. Poles	Cat. #	Length (mm)	Std. Pk.
2	SVR02-5.00	10.00	100
3	SVR03-5.00	15.00	100
4	SVR04-5.00	20.00	50
5	SVR05-5.00	25.00	50
6	SVR06-5.00	30.00	50
7	SVR07-5.00	35.00	50
8	SVR08-5.00	40.00	50
9	SVR09-5.00	45.00	50
10	SVR10-5.00	50.00	50
11	SVR11-5.00	55.00	50
12	SVR12-5.00	60.00	50
13	SVR13-5.00	65.00	20
14	SVR14-5.00	70.00	20
15	SVR15-5.00	75.00	20
16	SVR16-5.00	80.00	20
17	SVR17-5.00	85.00	20
18	SVR18-5.00	90.00	20
19	SVR19-5.00	95.00	20
20	SVR20-5.00	100.00	20
21	SVR21-5.00	105.00	20
22	SVR22-5.00	110.00	20
23	SVR23-5.00	115.00	20
24	SVR24-5.00	120.00	20

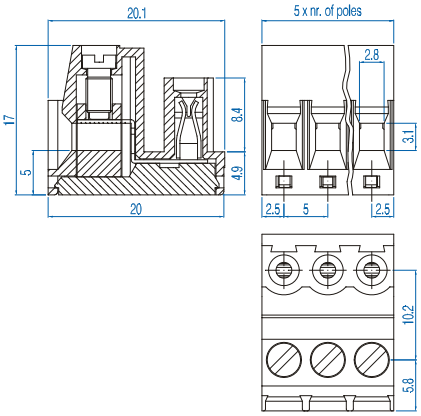

5.00mm Pin Spacing – Pluggable PCB Blocks

Pin Spacing: 5.00mm
Orientation: Vertical Plug with flange
Clamp Type: Screw Cage
Design: Single Mold

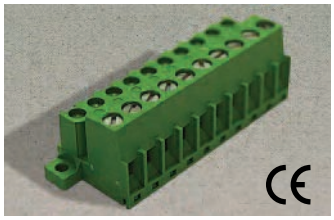

SVRxx-5.00-K

ELECTRICAL

	Current	Voltage	Wire Range
cULus E178356	12A	300V	30-14AWG
IEC	16A	250V	2.5mm² Stranded 4.0mm² Solid

INSTALLATION DATA

Screw Size	M3	**PCB Hole Size**	–
Torque	0.5Nm (4.5 lbf-in.)	**Stripping Lgth.**	7.5mm

MATERIAL

Body	Polyamide	**Screw**	Galvanized Steel
Flammability Class	UL94V-0	**Terminal**	Tin-Plated Brass
Temperature Limit	105˚C UL 125˚C IEC	**Clamp**	Nickeled Brass
Color	Green		

No. Poles	Cat. #	Length (mm)	Std. Pk.
2	SVR02-5.00-K	19.8	100
3	SVR03-5.00-K	24.8	100
4	SVR04-5.00-K	29.8	50
5	SVR05-5.00-K	34.8	50
6	SVR06-5.00-K	39.8	50
7	SVR07-5.00-K	44.8	50
8	SVR08-5.00-K	49.8	50
9	SVR09-5.00-K	54.8	50
10	SVR10-5.00-K	59.8	50
11	SVR11-5.00-K	64.8	50
12	SVR12-5.00-K	69.8	50
13	SVR13-5.00-K	74.8	20
14	SVR14-5.00-K	79.8	20
15	SVR15-5.00-K	84.8	20
16	SVR16-5.00-K	89.8	20
17	SVR17-5.00-K	94.8	20
18	SVR18-5.00-K	99.8	20
19	SVR19-5.00-K	104.8	20
20	SVR20-5.00-K	109.8	20
21	SVR21-5.00-K	114.8	20
22	SVR22-5.00-K	119.8	20

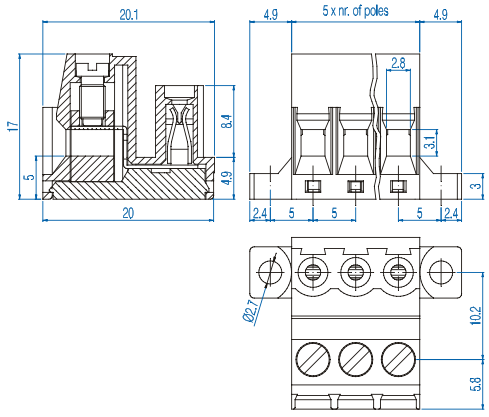

Pin Spacing: 5.00mm
Orientation: Vertical Header
Clamp Type: –
Design: Single Mold-Open End



PVxx-5.00

ELECTRICAL

	Current	Voltage	Wire Range
cULus E178356	12A	300V	–
IEC	16A	450V	–

INSTALLATION DATA

Screw Size	–	**PCB Hole Size**	1.5mm
Torque	–	**Stripping Lgth.**	–

MATERIAL

Body	Polyamide	**Screw**	–
Flammability Class	UL94V-0	**Terminal**	Tin-Plated Brass
Temperature Limit	105˚C UL 125˚C IEC	**Clamp**	–
Color	Green		

No. Poles	Cat. #	Length (mm)	Std. Pk.
2	PV02-5.00	10.0	100
3	PV03-5.00	15.0	100
4	PV04-5.00	20.0	50
5	PV05-5.00	25.0	50
6	PV06-5.00	30.0	50
7	PV07-5.00	35.0	50
8	PV08-5.00	40.0	50
9	PV09-5.00	45.0	50
10	PV10-5.00	50.0	50
11	PV11-5.00	55.0	50
12	PV12-5.00	60.0	50
13	PV13-5.00	65.0	20
14	PV14-5.00	70.0	20
15	PV15-5.00	75.0	20
16	PV16-5.00	80.0	20
17	PV17-5.00	85.0	20
18	PV18-5.00	90.0	20
19	PV19-5.00	95.0	20
20	PV20-5.00	100.0	20
21	PV21-5.00	105.0	20
22	PV22-5.00	110.0	20
23	PV23-5.00	115.0	20
24	PV24-5.00	120.0	20

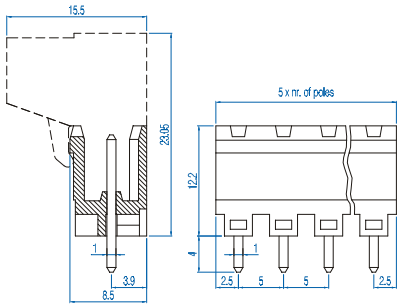

Pin Spacing: 5.00mm
Orientation: Horizontal Header
Clamp Type: –
Design: Single Mold - Open End

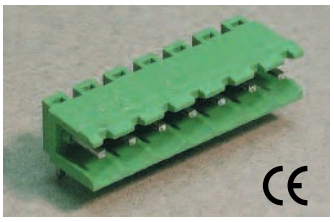

PHxx-5.00

ELECTRICAL

	Current	Voltage	Wire Range
cULus E178356	12A	300V	–
IEC	16A	450V	–

INSTALLATION DATA

Screw Size	–	**PCB Hole Size**	1.5mm
Torque	–	**Stripping Lgth.**	–

MATERIAL

Body	Polyamide	**Screw**	–
Flammability Class	UL94V-0	**Terminal**	Tin-Plated Brass
Temperature Limit	105˚C UL 125˚C IEC	**Clamp**	–
Color	Green		

No. Poles	Cat. #	Length (mm)	Std. Pk.
2	PH02-5.00	10.0	100
3	PH03-5.00	15.0	100
4	PH04-5.00	20.0	50
5	PH05-5.00	25.0	50
6	PH06-5.00	30.0	50
7	PH07-5.00	35.0	50
8	PH08-5.00	40.0	50
9	PH09-5.00	45.0	50
10	PH10-5.00	50.0	50
11	PH11-5.00	55.0	50
12	PH12-5.00	60.0	50
13	PH13-5.00	65.0	20
14	PH14-5.00	70.0	20
15	PH15-5.00	75.0	20
16	PH16-5.00	80.0	20
17	PH17-5.00	85.0	20
18	PH18-5.00	90.0	20
19	PH19-5.00	95.0	20
20	PH20-5.00	100.0	20
21	PH21-5.00	105.0	20
22	PH22-5.00	110.0	20
23	PH23-5.00	115.0	20
24	PH24-5.00	120.0	20

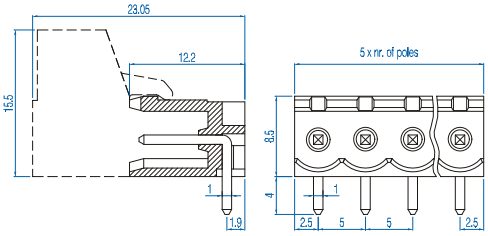

Pin Spacing: 5.00mm
Orientation: Vertical Header
Clamp Type: –
Design: Single Mold - Closed End

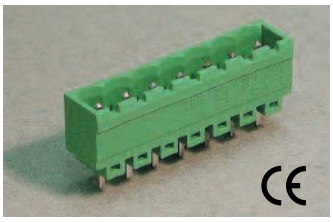

PVPxx-5.00

ELECTRICAL

	Current	Voltage	Wire Range
cULus E178356	12A	300V	–
IEC	16A	450V	–

INSTALLATION DATA

Screw Size	–	**PCB Hole Size**	1.5mm
Torque	–	**Stripping Lgth.**	–

MATERIAL

Body	Polyamide	**Screw**	–
Flammability Class	UL94V-0	**Terminal**	Tin-Plated Brass
Temperature Limit	105˚C UL 125˚C IEC	**Clamp**	–
Color	Green		

No. Poles	Cat. #	Length (mm)	Std. Pk.
2	PVP02-5.00	12.0	100
3	PVP03-5.00	17.0	100
4	PVP04-5.00	22.0	50
5	PVP05-5.00	27.0	50
6	PVP06-5.00	32.0	50
7	PVP07-5.00	37.0	50
8	PVP08-5.00	42.0	50
9	PVP09-5.00	47.0	50
10	PVP10-5.00	52.0	50
11	PVP11-5.00	57.0	50
12	PVP12-5.00	62.0	50
13	PVP13-5.00	67.0	20
14	PVP14-5.00	72.0	20
15	PVP15-5.00	77.0	20
16	PVP16-5.00	82.0	20
17	PVP17-5.00	87.0	20
18	PVP18-5.00	92.0	20
19	PVP19-5.00	97.0	20
20	PVP20-5.00	102.0	20
21	PVP21-5.00	107.0	20
22	PVP22-5.00	112.0	20
23	PVP23-5.00	117.0	20
24	PVP24-5.00	122.0	20

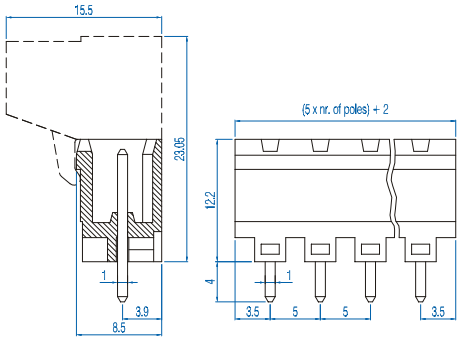

5.00mm Pin Spacing – Pluggable PCB Blocks

Pin Spacing: 5.00mm
Orientation: Horizontal Header
Clamp Type: –
Design: Single Mold - Closed End

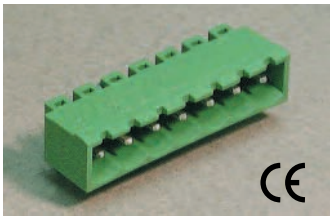

PHPxx-5.00

ELECTRICAL

	Current	Voltage	Wire Range
c UL us E178356	12A	300V	–
IEC	16A	450V	–

INSTALLATION DATA

Screw Size	–	**PCB Hole Size**	1.5mm
Torque	–	**Stripping Lgth.**	–

MATERIAL

Body	Polyamide	**Screw**	–
Flammability Class	UL94V-0	**Terminal**	Tin-Plated Brass
Temperature Limit	105˚C UL 125˚C IEC	**Clamp**	–
Color	Green		

No. Poles	Cat. #	Length (mm)	Std. Pk.
2	PHP02-5.00	12.0	100
3	PHP03-5.00	17.0	100
4	PHP04-5.00	22.0	50
5	PHP05-5.00	27.0	50
6	PHP06-5.00	32.0	50
7	PHP07-5.00	37.0	50
8	PHP08-5.00	42.0	50
9	PHP09-5.00	47.0	50
10	PHP10-5.00	52.0	50
11	PHP11-5.00	57.0	50
12	PHP12-5.00	62.0	50
13	PHP13-5.00	67.0	20
14	PHP14-5.00	72.0	20
15	PHP15-5.00	77.0	20
16	PHP16-5.00	82.0	20
17	PHP17-5.00	87.0	20
18	PHP18-5.00	92.0	20
19	PHP19-5.00	97.0	20
20	PHP20-5.00	102.0	20
21	PHP21-5.00	107.0	20
22	PHP22-5.00	112.0	20
23	PHP23-5.00	117.0	20
24	PHP24-5.00	122.0	20

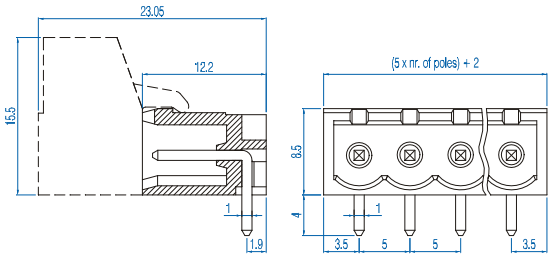

Pin Spacing: 5.08mm
Orientation: Horizontal Plug
Clamp Type: Screw Cage
Design: Single Mold

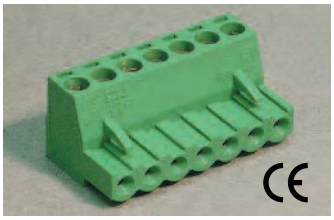

SHxx-5.08

ELECTRICAL

	Current	Voltage	Wire Range
cULus E178356	12A	300V	30-14AWG
IEC	16A	450V	2.5mm² Stranded 4.0mm² Solid

INSTALLATION DATA

Screw Size	M3	**PCB Hole Size**	–
Torque	0.5Nm (4.5 lbf-in.)	**Stripping Lgth.**	7.5mm

MATERIAL

Body	Polyamide	**Screw**	Galvanized Steel
Flammability Class	UL94V-0	**Terminal**	Nickeled Brass
Temperature Limit	105˚C UL 125˚C IEC	**Clamp**	Nickeled Brass
Color	Green		

No. Poles	Cat. #	Length (mm)	Std. Pk.
2	SH02-5.08	10.2	100
3	SH03-5.08	15.2	100
4	SH04-5.08	20.3	50
5	SH05-5.08	25.4	50
6	SH06-5.08	30.5	50
7	SH07-5.08	35.6	50
8	SH08-5.08	40.6	50
9	SH09-5.08	45.7	50
10	SH10-5.08	50.8	50
11	SH11-5.08	55.9	50
12	SH12-5.08	61.0	50
13	SH13-5.08	66.0	20
14	SH14-5.08	71.1	20
15	SH15-5.08	76.2	20
16	SH16-5.08	81.3	20
17	SH17-5.08	86.4	20
18	SH18-5.08	91.4	20
19	SH19-5.08	96.5	20
20	SH20-5.08	101.6	20
21	SH21-5.08	106.7	20
22	SH22-5.08	111.8	20
23	SH23-5.08	116.6	20
24	SH24-5.08	121.9	20

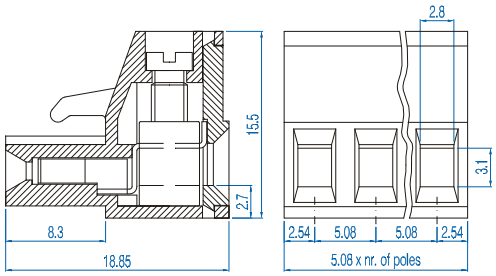

Pin Spacing: 5.08mm
Orientation: Vertical Plug-Wire Entry on Scalloped Side
Clamp Type: Screw Cage
Design: Single Mold

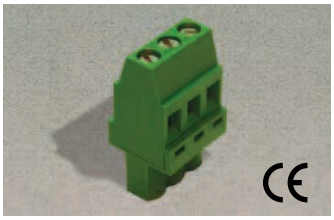

SVPxx-5.08

ELECTRICAL

	Current	Voltage	Wire Range
cULus E178356	12A	300V	30-14AWG
IEC	16A	450V	2.5mm² Stranded 4.0mm² Solid

INSTALLATION DATA

Screw Size	M3	**PCB Hole Size**	–
Torque	0.5Nm (4.5 lbf-in.)	**Stripping Lgth.**	9.1mm

MATERIAL

Body	Polyamide	**Screw**	Galvanized Steel
Flammability Class	UL94V-0	**Terminal**	Nickeled Brass
Temperature Limit	105˚C UL 125˚C IEC	**Clamp**	Nickeled Brass
Color	Green		

No. Poles	Cat. #	Length (mm)	Std. Pk.
2	SVP02-5.08	10.2	100
3	SVP03-5.08	15.2	100
4	SVP04-5.08	20.3	50
5	SVP05-5.08	25.4	50
6	SVP06-5.08	30.5	50
7	SVP07-5.08	35.6	50
8	SVP08-5.08	40.6	50
9	SVP09-5.08	45.7	50
10	SVP10-5.08	50.8	50
11	SVP11-5.08	55.9	50
12	SVP12-5.08	61.0	50
13	SVP13-5.08	66.0	20
14	SVP14-5.08	71.1	20
15	SVP15-5.08	76.2	20
16	SVP16-5.08	81.3	20
17	SVP17-5.08	86.4	20
18	SVP18-5.08	91.4	20
19	SVP19-5.08	96.5	20
20	SVP20-5.08	101.6	20
21	SVP21-5.08	106.7	20
22	SVP22-5.08	111.8	20
23	SVP23-5.08	116.6	20
24	SVP24-5.08	121.9	20

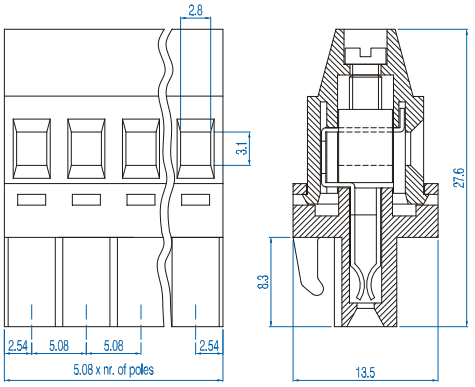

5.08mm Pin Spacing – Pluggable PCB Blocks

Pin Spacing: 5.08mm
Orientation: Vertical Plug-Wire Entry on Locking Tab Side
Clamp Type: Screw Cage
Design: Single Mold

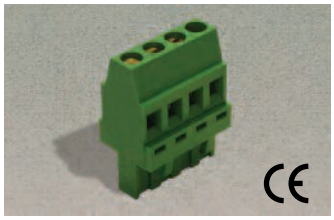

SVFxx-5.08

ELECTRICAL

	Current	Voltage	Wire Range
cULus E178356	12A	300V	30-14AWG
IEC	16A	450V	2.5mm² Stranded 4.0mm² Solid

INSTALLATION DATA

Screw Size	M3	**PCB Hole Size**	–
Torque	0.5Nm (4.5 lbf-in.)	**Stripping Lgth.**	9.1mm

MATERIAL

Body	Polyamide	**Screw**	Galvanized Steel
Flammability Class	UL94V-0	**Terminal**	Nickeled Brass
Temperature Limit	105˚C UL 125˚C IEC	**Clamp**	Nickeled Brass
Color	Green		

No. Poles	Cat. #	Length (mm)	Std. Pk.
2	SVF02-5.08	10.2	100
3	SVF03-5.08	15.2	100
4	SVF04-5.08	20.3	50
5	SVF05-5.08	25.4	50
6	SVF06-5.08	30.5	50
7	SVF07-5.08	35.6	50
8	SVF08-5.08	40.6	50
9	SVF09-5.08	45.7	50
10	SVF10-5.08	50.8	50
11	SVF11-5.08	55.9	50
12	SVF12-5.08	61.0	50
13	SVF13-5.08	66.0	20
14	SVF14-5.08	71.1	20
15	SVF15-5.08	76.2	20
16	SVF16-5.08	81.3	20
17	SVF17-5.08	86.4	20
18	SVF18-5.08	91.4	20
19	SVF19-5.08	96.5	20
20	SVF20-5.08	101.6	20
21	SVF21-5.08	106.7	20
22	SVF22-5.08	111.8	20
23	SVF23-5.08	116.6	20
24	SVF24-5.08	121.9	20

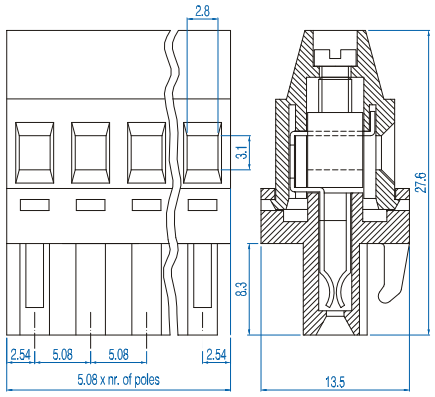

Pin Spacing: 5.08mm
Orientation: Horizontal Plug with Screw Flange
Clamp Type: Screw Cage
Design: Single Mold

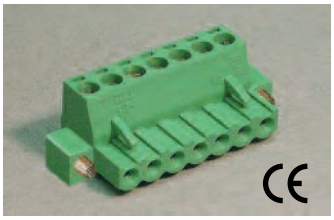

SHxx-5.08-K

ELECTRICAL

	Current	Voltage	Wire Range
cULus E178356	12A	300V	30-14AWG
IEC	16A	500V	2.5mm² Stranded 4.0mm² Solid

INSTALLATION DATA

Screw Size	M3	**PCB Hole Size**	–
Torque	0.5Nm (4.5 lbf-in)	**Stripping Lgth.**	7.5mm

MATERIAL

Body	Polyamide	**Screw**	Galvanized Steel
Flammability Class	UL94V-0	**Terminal**	Nickeled Brass
Temperature Limit	105˚C UL 125˚C IEC	**Clamp**	Nickeled Brass
Color	Green		

No. Poles	Cat. #	Length (mm)	Std. Pk.
2	SH02-5.08 - K	20.3	100
3	SH03-5.08 - K	25.4	100
4	SH04-5.08 - K	30.5	50
5	SH05-5.08 - K	35.6	50
6	SH06-5.08 - K	40.6	50
7	SH07-5.08 - K	45.7	50
8	SH08-5.08 - K	50.8	50
9	SH09-5.08 - K	55.9	50
10	SH10-5.08 - K	61.0	50
11	SH11-5.08 - K	66.0	50
12	SH12-5.08 - K	71.1	50
13	SH13-5.08 - K	76.2	20
14	SH14-5.08 - K	81.3	20
15	SH15-5.08 - K	86.4	20
16	SH16-5.08 - K	91.4	20
17	SH17-5.08 - K	96.5	20
18	SH18-5.08 - K	101.6	20
19	SH19-5.08 - K	106.7	20
20	SH20-5.08 - K	111.8	20
21	SH21-5.08 - K	116.6	20
22	SH22-5.08 - K	121.9	20

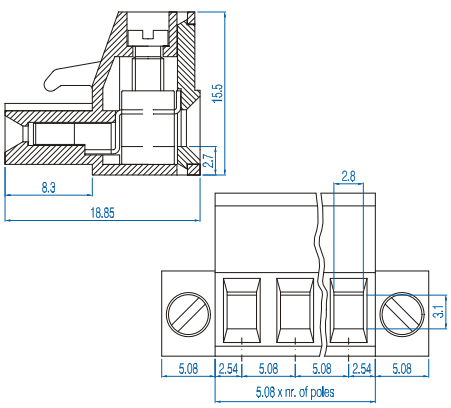

Pin Spacing: 5.08mm
Orientation: Horizontal Inverted Plug
Clamp Type: Screw Cage
Design: Single Mold

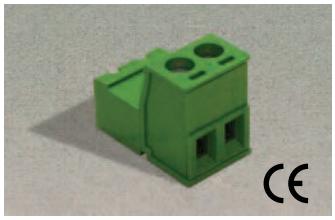

SFxx-5.08

ELECTRICAL

	Current	Voltage	Wire Range
c UL us E178356	12A	300V	30-14AWG
IEC	16A	450V	2.5mm² Stranded 4.0mm² Solid

INSTALLATION DATA

Screw Size	M3	**PCB Hole Size**	–
Torque	0.5Nm (4.5 lbf-in.)	**Stripping Lgth.**	7.5mm

MATERIAL

Body	Polyamide	**Screw**	Galvanized Steel
Flammability Class	UL94V-0	**Terminal**	Nickeled Brass
Temperature Limit	105˚C UL 125˚C IEC	**Clamp**	Nickeled Brass
Color	Green		

No. Poles	Cat. #	Length (B) (mm)	Std. Pk.
2	SF02-5.08	11.7	100
3	SF03-5.08	16.7	100
4	SF04-5.08	21.8	50
5	SF05-5.08	27.0	50
6	SF06-5.08	32.0	50
7	SF07-5.08	37.1	50
8	SF08-5.08	42.1	50
9	SF09-5.08	47.2	50
10	SF10-5.08	52.3	50
11	SF11-5.08	57.4	50
12	SF12-5.08	62.5	50
13	SF13-5.08	67.5	20
14	SF14-5.08	72.6	20
15	SF15-5.08	77.7	20
16	SF16-5.08	82.8	20
17	SF17-5.08	87.9	20
18	SF18-5.08	92.9	20
19	SF19-5.08	98.0	20
20	SF20-5.08	103.1	20
21	SF21-5.08	108.2	20
22	SF22-5.08	113.3	20
23	SF23-5.08	118.3	20
24	SF24-5.08	123.4	20

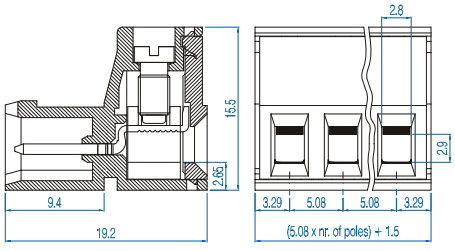

Pin Spacing: 5.08mm
Orientation: Vertical Header
Clamp Type: –
Design: Single Mold-Open End



PVxx-5.08

ELECTRICAL

	Current	Voltage	Wire Range
c UL us E178356	12A	300V	–
IEC	16A	450V	–

INSTALLATION DATA

Screw Size	–	**PCB Hole Size**	1.5mm
Torque	–	**Stripping Lgth.**	–

MATERIAL

Body	Polyamide	**Screw**	–
Flammability Class	UL94V-0	**Terminal**	Tin-Plated Brass
Temperature Limit	105˚C UL 125˚C IEC	**Clamp**	–
Color	Green		

No. Poles	Cat. #	Length (mm)	Std. Pk.
2	PV02-5.08	10.2	100
3	PV03-5.08	15.2	100
4	PV04-5.08	20.3	50
5	PV05-5.08	25.4	50
6	PV06-5.08	30.5	50
7	PV07-5.08	35.6	50
8	PV08-5.08	40.6	50
9	PV09-5.08	45.7	50
10	PV10-5.08	50.8	50
11	PV11-5.08	55.9	50
12	PV12-5.08	61.0	50
13	PV13-5.08	66.0	20
14	PV14-5.08	71.1	20
15	PV15-5.08	76.2	20
16	PV16-5.08	81.3	20
17	PV17-5.08	86.4	20
18	PV18-5.08	91.4	20
19	PV19-5.08	96.5	20
20	PV20-5.08	101.6	20
21	PV21-5.08	106.7	20
22	PV22-5.08	111.8	20
23	PV23-5.08	116.6	20
24	PV24-5.08	121.9	20

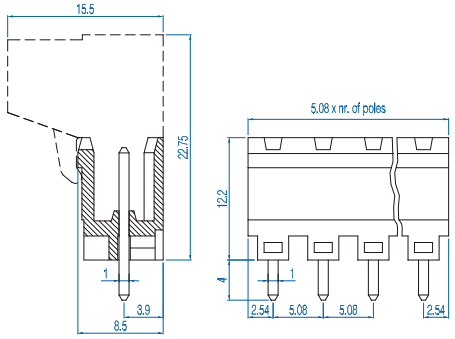

5.08mm Pin Spacing – Pluggable PCB Blocks

Pin Spacing: 5.08mm
Orientation: Horizontal Header
Clamp Type: –
Design: Single Mold - Open End

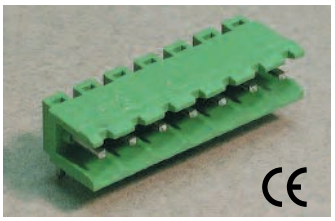

PHxx-5.08

ELECTRICAL

	Current	Voltage	Wire Range
cULus E178356	12A	300V	–
IEC	16A	450V	–

INSTALLATION DATA

Screw Size	–	**PCB Hole Size**	1.5mm
Torque	–	**Stripping Lgth.**	–

MATERIAL

Body	Polyamide	**Screw**	–
Flammability Class	UL94V-0	**Terminal**	Tin-Plated Brass
Temperature Limit	105˚C UL 125˚C IEC	**Clamp**	–
Color	Green		

No. Poles	Cat. #	Length (mm)	Std. Pk.
2	PH02-5.08	10.2	100
3	PH03-5.08	15.2	100
4	PH04-5.08	20.3	50
5	PH05-5.08	25.4	50
6	PH06-5.08	30.5	50
7	PH07-5.08	35.6	50
8	PH08-5.08	40.6	50
9	PH09-5.08	45.7	50
10	PH10-5.08	50.8	50
11	PH11-5.08	55.9	50
12	PH12-5.08	61.0	50
13	PH13-5.08	66.0	20
14	PH14-5.08	71.1	20
15	PH15-5.08	76.2	20
16	PH16-5.08	81.3	20
17	PH17-5.08	86.4	20
18	PH18-5.08	91.4	20
19	PH19-5.08	96.5	20
20	PH20-5.08	101.6	20
21	PH21-5.08	106.7	20
22	PH22-5.08	111.8	20
23	PH23-5.08	116.6	20
24	PH24-5.08	121.9	20

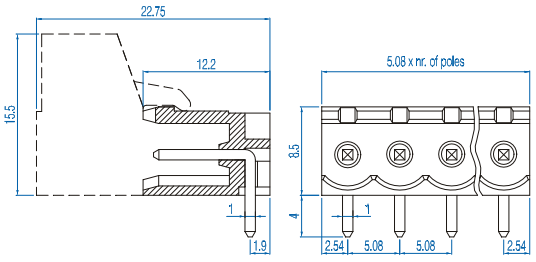

Pin Spacing: 5.08mm
Orientation: Vertical Header
Clamp Type: –
Design: Single Mold - Closed End

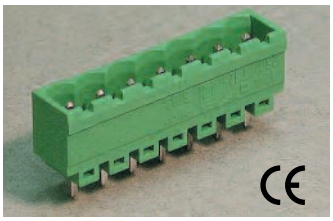

PVPxx-5.08

ELECTRICAL

	Current	Voltage	Wire Range
cULus E178356	12A	300V	–
IEC	16A	450V	–

INSTALLATION DATA

Screw Size	–	**PCB Hole Size**	1.5mm
Torque	–	**Stripping Lgth.**	–

MATERIAL

Body	Polyamide	**Screw**	–
Flammability Class	UL94V-0	**Terminal**	Tin-Plated Brass
Temperature Limit	105˚C UL 125˚C IEC	**Clamp**	–
Color	Green		

No. Poles	Cat. #	Length (mm)	Std. Pk.
2	PVP02-5.08	12.2	100
3	PVP03-5.08	17.2	100
4	PVP04-5.08	22.3	50
5	PVP05-5.08	27.4	50
6	PVP06-5.08	32.5	50
7	PVP07-5.08	37.6	50
8	PVP08-5.08	42.6	50
9	PVP09-5.08	47.7	50
10	PVP10-5.08	52.8	50
11	PVP11-5.08	57.9	50
12	PVP12-5.08	63.0	50
13	PVP13-5.08	68.0	20
14	PVP14-5.08	73.1	20
15	PVP15-5.08	78.2	20
16	PVP16-5.08	83.3	20
17	PVP17-5.08	88.4	20
18	PVP18-5.08	93.4	20
19	PVP19-5.08	98.5	20
20	PVP20-5.08	103.6	20
21	PVP21-5.08	108.7	20
22	PVP22-5.08	113.8	20
23	PVP23-5.08	118.6	20
24	PVP24-5.08	123.9	20

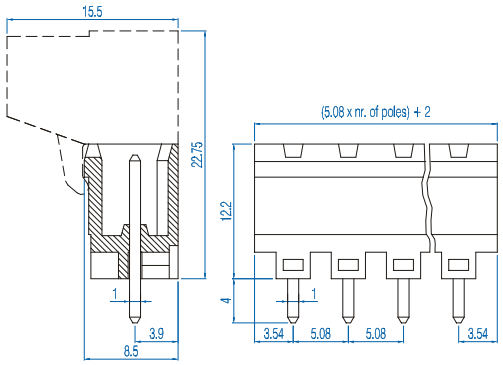

Pin Spacing: 5.08mm
Orientation: Horizontal Header
Clamp Type: –
Design: Single Mold - Closed End

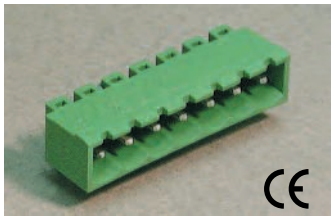

PHPxx-5.08

ELECTRICAL

	Current	Voltage	Wire Range
cULus E178356	12A	300V	–
IEC	16A	450V	–

INSTALLATION DATA

Screw Size	–	**PCB Hole Size**	1.5mm
Torque	–	**Stripping Lgth.**	–

MATERIAL

Body	Polyamide	**Screw**	–
Flammability Class	UL94V-0	**Terminal**	Tin-Plated Brass
Temperature Limit	105˚C UL 125˚C IEC	**Clamp**	–
Color	Green		

No. Poles	Cat. #	Length (mm)	Std. Pk.
2	PHP02-5.08	12.2	100
3	PHP03-5.08	17.2	100
4	PHP04-5.08	22.3	50
5	PHP05-5.08	27.4	50
6	PHP06-5.08	32.5	50
7	PHP07-5.08	37.6	50
8	PHP08-5.08	42.6	50
9	PHP09-5.08	47.7	50
10	PHP10-5.08	52.8	50
11	PHP11-5.08	57.9	50
12	PHP12-5.08	63.0	50
13	PHP13-5.08	68.0	20
14	PHP14-5.08	73.1	20
15	PHP15-5.08	78.2	20
16	PHP16-5.08	83.3	20
17	PHP17-5.08	88.4	20
18	PHP18-5.08	93.4	20
19	PHP19-5.08	98.5	20
20	PHP20-5.08	103.6	20
21	PHP21-5.08	108.7	20
22	PHP22-5.08	113.8	20
23	PHP23-5.08	118.6	20
24	PHP24-5.08	123.9	20

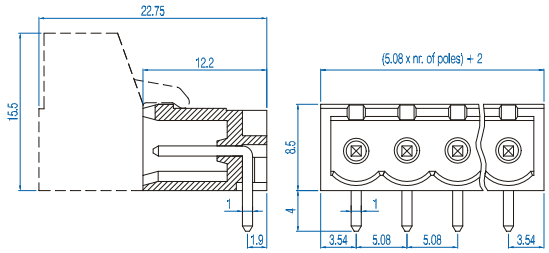

Pin Spacing: 5.08mm
Orientation: 45° Angle Header
Design: Single Mold - Open End

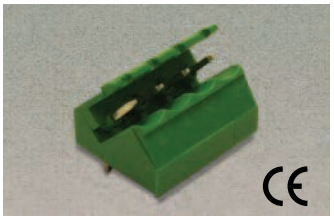

PIxx-5.08

ELECTRICAL

	Current	Voltage	Wire Range
cULus E178356	12A	300V	–
IEC	16A	450V	–

INSTALLATION DATA

Screw Size	–	**PCB Hole Size**	1.5mm
Torque	–	**Stripping Lgth.**	–

MATERIAL

Body	Polyamide	**Screw**	–
Flammability Class	UL94V-0	**Terminal**	Tin-Plated Brass
Temperature Limit	105˚C UL 125˚C IEC	**Clamp**	–
Color	Green		

No. Poles	Cat. #	Length (mm)	Std. Pk.
2	PI02-5.08	10.2	100
3	PI03-5.08	15.2	100
4	PI04-5.08	20.3	50
5	PI05-5.08	25.4	50
6	PI06-5.08	30.5	50
7	PI07-5.08	35.6	50
8	PI08-5.08	40.6	50
9	PI09-5.08	45.7	50
10	PI10-5.08	50.8	50
11	PI11-5.08	55.9	50
12	PI12-5.08	61.0	50
13	PI13-5.08	66.0	20
14	PI14-5.08	71.1	20
15	PI15-5.08	76.2	20
16	PI16-5.08	81.3	20
17	PI17-5.08	86.4	20
18	PI18-5.08	91.4	20
19	PI19-5.08	96.5	20
20	PI20-5.08	101.6	20
21	PI21-5.08	106.7	20
22	PI22-5.08	111.8	20
23	PI23-5.08	116.8	20
24	PI24-5.08	121.9	20

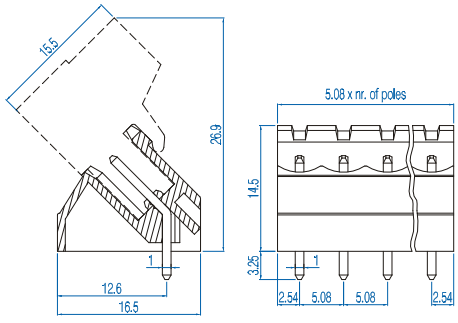

5.08mm Pin Spacing – Pluggable PCB Blocks

Pin Spacing: 5.08mm
Orientation: 45° Angle Header
Clamp Type: –
Design: Single Mold - Closed End

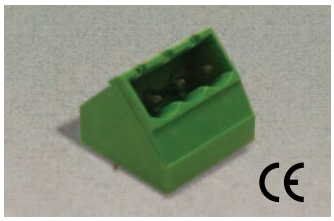

PIPxx-5.08

ELECTRICAL

	Current	Voltage	Wire Range
cULus E178356	12A	300V	–
IEC	16A	450V	–

INSTALLATION DATA

Screw Size	–	**PCB Hole Size**	1.5mm
Torque	–	**Stripping Lgth.**	–

MATERIAL

Body	Polyamide	**Screw**	–
Flammability Class	UL94V-0	**Terminal**	Tin-Plated Brass
Temperature Limit	105˚C UL 125˚C IEC	**Clamp**	–
Color	Green		

No. Poles	Cat. #	Length (mm)	Std. Pk.
2	PIP02-5.08	12.2	100
3	PIP03-5.08	17.2	100
4	PIP04-5.08	22.3	50
5	PIP05-5.08	27.4	50
6	PIP06-5.08	32.5	50
7	PIP07-5.08	37.6	50
8	PIP08-5.08	42.6	50
9	PIP09-5.08	47.7	50
10	PIP10-5.08	52.8	50
11	PIP11-5.08	57.9	50
12	PIP12-5.08	63.0	50
13	PIP13-5.08	68.0	20
14	PIP14-5.08	73.1	20
15	PIP15-5.08	78.2	20
16	PIP16-5.08	83.3	20
17	PIP17-5.08	88.4	20
18	PIP18-5.08	93.4	20
19	PIP19-5.08	98.5	20
20	PIP20-5.08	103.6	20
21	PIP21-5.08	108.7	20
22	PIP22-5.08	113.8	20
23	PIP23-5.08	118.6	20
24	PIP24-5.08	123.9	20

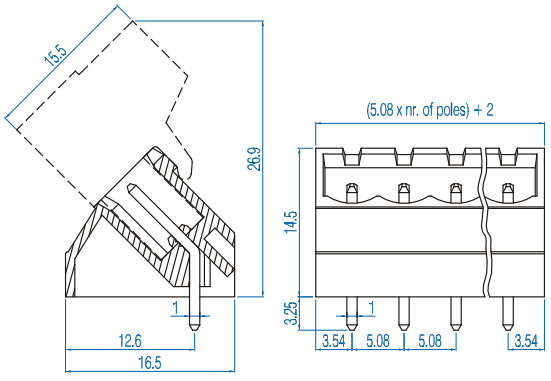

Pin Spacing: 5.08mm
Orientation: Vertical - Double Level Header
Clamp Type: –
Design: Modular - Open End

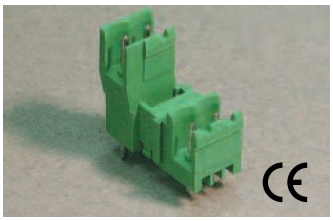

PDSVxx-5.08

ELECTRICAL

	Current	Voltage	Wire Range
cULus E178356	12A	300V	–
IEC	16A	450V	–

INSTALLATION DATA

Screw Size	–	**PCB Hole Size**	1.5mm
Torque	–	**Stripping Lgth.**	–

MATERIAL

Body	Polyamide	**Screw**	–
Flammability Class	UL94V-0	**Terminal**	Tin-Plated Brass
Temperature Limit	105˚C UL 125˚C IEC	**Clamp**	–
Color	Green		

No. Poles	Cat. #	Length (mm)	Std. Pk.
4	PDSV02-5.08	12.7	100
6	PDSV03-5.08	17.8	100
8	PDSV04-5.08	22.9	50
10	PDSV05-5.08	28.0	50
12	PDSV06-5.08	33.0	50
14	PDSV07-5.08	38.0	50
16	PDSV08-5.08	43.2	50
18	PDSV09-5.08	48.3	50
20	PDSV10-5.08	53.3	50
22	PDSV11-5.08	58.4	20
24	PDSV12-5.08	63.5	20
26	PDSV13-5.08	68.6	20
28	PDSV14-5.08	73.7	20
30	PDSV15-5.08	78.7	20
32	PDSV16-5.08	83.8	20
34	PDSV17-5.08	89.9	20
36	PDSV18-5.08	94.0	20
38	PDSV19-5.08	99.1	20
40	PDSV20-5.08	104.1	10
42	PDSV21-5.08	109.2	10
44	PDSV22-5.08	114.3	10
46	PDSV23-5.08	119.4	10
48	PDSV24-5.08	124.5	10

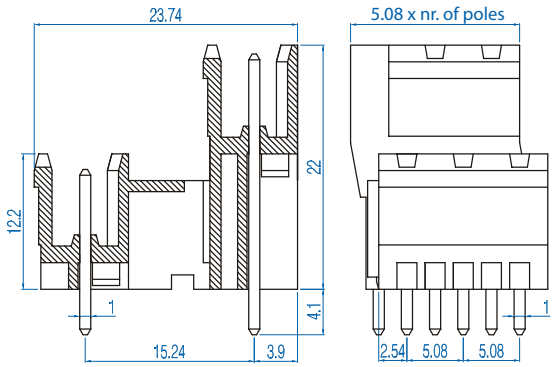

Pin Spacing: 5.08mm
Orientation: Horizontal - Double Level Header
Clamp Type: –
Design: Modular - Open End

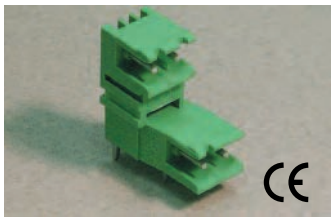

PDSHxx-5.08

ELECTRICAL

	Current	Voltage	Wire Range
cULus E178356	12A	300V	–
IEC	16A	450V	–

INSTALLATION DATA

Screw Size	–	**PCB Hole Size**	1.5mm
Torque	–	**Stripping Lgth.**	–

MATERIAL

Body	Polyamide	**Screw**	–
Flammability Class	UL94V-0	**Terminal**	Tin-Plated Brass
Temperature Limit	105˚C UL 125˚C IEC	**Clamp**	–
Color	Green		

No. Poles	Cat. #	Length (mm)	Std. Pk.
4	PDSH02-5.08	12.7	100
6	PDSH03-5.08	17.8	100
8	PDSH04-5.08	22.9	50
10	PDSH05-5.08	28.0	50
12	PDSH06-5.08	33.0	50
14	PDSH07-5.08	38.0	50
16	PDSH08-5.08	43.2	50
18	PDSH09-5.08	48.3	50
20	PDSH10-5.08	53.3	50
22	PDSH11-5.08	58.4	20
24	PDSH12-5.08	63.5	20
26	PDSH13-5.08	68.6	20
28	PDSH14-5.08	73.7	20
30	PDSH15-5.08	78.7	20
32	PDSH16-5.08	83.8	20
34	PDSH17-5.08	89.9	20
36	PDSH18-5.08	94.0	20
38	PDSH19-5.08	99.1	20
40	PDSH20-5.08	104.1	10
42	PDSH21-5.08	109.2	10
44	PDSH22-5.08	114.3	10
46	PDSH23-5.08	119.4	10
48	PDSH24-5.08	124.5	10

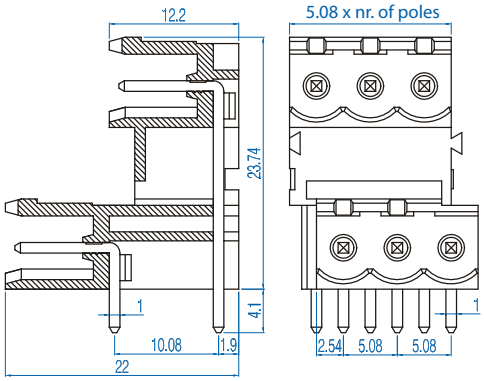

Pin Spacing: 5.08mm
Orientation: Dual Row Vertical Header
Clamp Type: –
Design: Single Mold

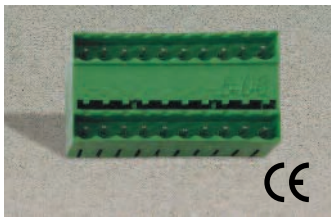

PDVxx-5.08

ELECTRICAL

	Current	Voltage	Wire Range
cULus E178356	12A	300V	–
IEC	16A	450V	–

INSTALLATION DATA

Screw Size	–	**PCB Hole Size**	1.5mm
Torque	–	**Stripping Lgth.**	–

MATERIAL

Body	Polyamide	**Screw**	–
Flammability Class	UL94V-0	**Terminal**	Tin-Plated Brass
Temperature Limit	105°C UL 125°C IEC	**Clamp**	–
Color	Green		

No. Poles	Cat. #	Length (mm)	Std. Pk.
2	PDV02-5.08	12.2	100
3	PDV03-5.08	17.2	100
4	PDV04-5.08	22.3	50
5	PDV05-5.08	27.4	50
6	PDV06-5.08	32.5	50
7	PDV07-5.08	37.6	50
8	PDV08-5.08	42.6	50
9	PDV09-5.08	47.7	50
10	PDV10-5.08	52.8	50
11	PDV11-5.08	57.9	50
12	PDV12-5.08	63.0	50

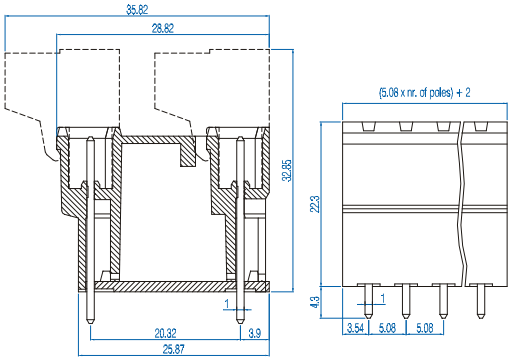

5.08mm Pin Spacing – Pluggable PCB Blocks

Pin Spacing: 5.08mm
Orientation: Dual Row Horizontal Header
Clamp Type: –
Design: Single Mold

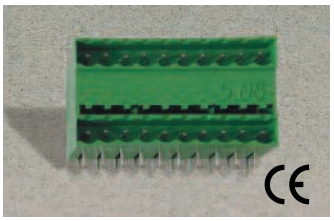

PDHxx-5.08

ELECTRICAL

	Current	Voltage	Wire Range
cULus E178356	12A	300V	–
IEC	16A	450V	–

INSTALLATION DATA

Screw Size	–	**PCB Hole Size**	1.5mm
Torque	–	**Stripping Lgth.**	–

MATERIAL

Body	Polyamide	**Screw**	–
Flammability Class	UL94V-0	**Terminal**	Tin-Plated Brass
Temperature Limit	105°C UL 125°C IEC	**Clamp**	–
Color	Green		

No. Poles	Cat. #	Length (mm)	Std. Pk.
2	PDH02-5.08	12.2	100
3	PDH03-5.08	17.2	100
4	PDH04-5.08	22.3	50
5	PDH05-5.08	27.4	50
6	PDH06-5.08	32.5	50
7	PDH07-5.08	37.6	50
8	PDH08-5.08	42.6	50
9	PDH09-5.08	47.7	50
10	PDH10-5.08	52.8	50
11	PDH11-5.08	57.9	50
12	PDH12-5.08	63.0	50

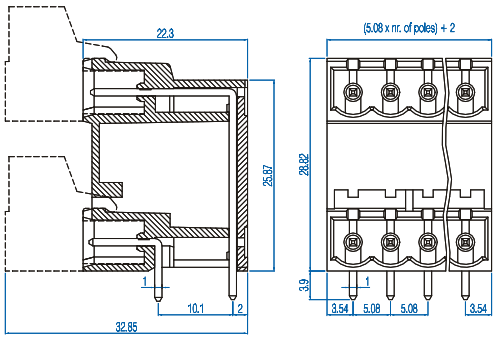

Pin Spacing: 5.08mm
Orientation: Vertical Header with Screw Flange
Clamp Type: –
Design: Single Mold

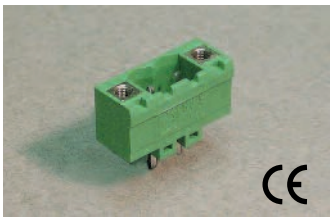

PVxx-5.08-K

ELECTRICAL

	Current	Voltage	Wire Range
cULus E178356	12A	300V	–
IEC	16A	450V	–

INSTALLATION DATA

Screw Size	–	**PCB Hole Size**	1.5mm
Torque	–	**Stripping Lgth.**	–

MATERIAL

Body	Polyamide	**Screw**	–
Flammability Class	UL94V-0	**Terminal**	Tin-Plated Brass
Temperature Limit	105°C UL 125°C IEC	**Clamp**	Nickeled Brass
Color	Green		

No. Poles	Cat. #	Length (mm)	Std. Pk.
2	PV02-5.08 - K	20.3	100
3	PV03-5.08 - K	25.4	100
4	PV04-5.08 - K	30.5	50
5	PV05-5.08 - K	35.6	50
6	PV06-5.08 - K	40.6	50
7	PV07-5.08 - K	45.7	50
8	PV08-5.08 - K	50.8	50
9	PV09-5.08 - K	55.9	50
10	PV10-5.08 - K	61.0	50
11	PV11-5.08 - K	66.0	50
12	PV12-5.08 - K	71.1	50
13	PV13-5.08 - K	76.2	20
14	PV14-5.08 - K	81.3	20
15	PV15-5.08 - K	86.4	20
16	PV16-5.08 - K	91.4	20
17	PV17-5.08 - K	96.5	20
18	PV18-5.08 - K	101.6	20
19	PV19-5.08 - K	106.7	20
20	PV20-5.08 - K	111.8	20
21	PV21-5.08 - K	116.6	20
22	PV22-5.08 - K	121.9	20

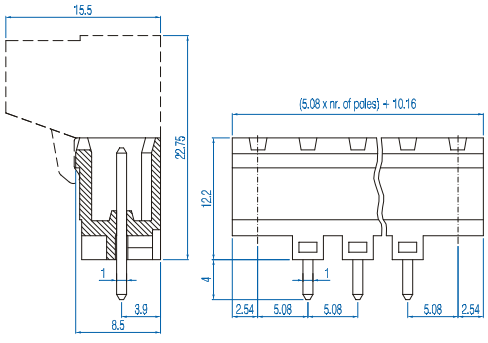

Pin Spacing: 5.08mm
Orientation: Horizontal Header with Screw Flange
Clamp Type: –
Design: Single Mold

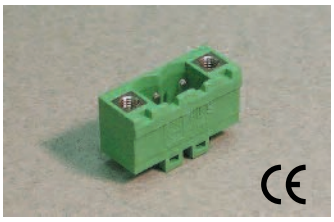

PHxx-5.08-K

ELECTRICAL

	Current	Voltage	Wire Range
cULus E178356	12A	300V	–
IEC	16A	450V	–

INSTALLATION DATA

Screw Size	–	**PCB Hole Size**	1.5mm
Torque	–	**Stripping Lgth.**	–

MATERIAL

Body	Polyamide	**Screw**	–
Flammability Class	UL94V-0	**Terminal**	Tin-Plated Brass
Temperature Limit	105˚C UL 125˚C IEC	**Clamp**	Nickeled Brass
Color	Green		

No. Poles	Cat. #	Length (mm)	Std. Pk.
2	PH02-5.08 - K	20.3	100
3	PH03-5.08 - K	25.4	100
4	PH04-5.08 - K	30.5	50
5	PH05-5.08 - K	35.6	50
6	PH06-5.08 - K	40.6	50
7	PH07-5.08 - K	45.7	50
8	PH08-5.08 - K	50.8	50
9	PH09-5.08 - K	55.9	50
10	PH10-5.08 - K	61.0	50
11	PH11-5.08 - K	66.0	50
12	PH12-5.08 - K	71.1	50
13	PH13-5.08 - K	76.2	20
14	PH14-5.08 - K	81.3	20
15	PH15-5.08 - K	86.4	20
16	PH16-5.08 - K	91.4	20
17	PH17-5.08 - K	96.5	20
18	PH18-5.08 - K	101.6	20
19	PH19-5.08 - K	106.7	20
20	PH20-5.08 - K	111.8	20
21	PH21-5.08 - K	116.6	20
22	PH22-5.08 - K	121.9	20

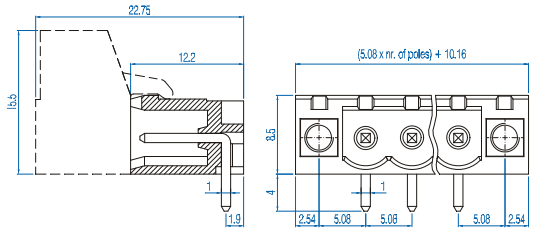

6.35mm Pin Spacing – Pluggable PCB Blocks

Pin Spacing: 6.35mm
Orientation: Vertical Plug
Clamp Type: Screw Cage
Design: Modular - Card Edge

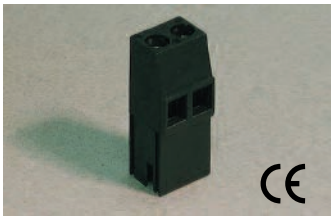

MVIxx

ELECTRICAL

	Current	Voltage	Wire Range
c UL us E178356	20A①	300V	30-12AWG
IEC	10A	500V	4.0mm² Stranded 6.0mm² Solid

INSTALLATION DATA

Screw Size	M3	**PCB Thickness**	1.5-1.7mm
Torque	0.5Nm (4.5 lbf-in.)	**Stripping Lgth.**	9.8mm

MATERIAL

Body	Polyamide	**Screw**	Galvanized Steel
Flammability Class	UL94V-0	**Terminal**	Nickeled Brass
Temperature Limit	105˚C UL 125˚C IEC	**Clamp**	Nickeled Brass
Color	Black		

No. Poles	Cat. #	Length (mm)	Std. Pk.
2	MVI-2	12.7	100
3	MVI-3	19.0	100
4	MVI-4	25.4	50
5	MVI-5	31.8	50
6	MVI-6	38.1	50
7	MVI-7	44.5	50
8	MVI-8	50.8	50
9	MVI-9	57.2	50
10	MVI-10	63.5	50
11	MVI-11	69.9	50
12	MVI-12	76.2	50
13	MVI-13	82.6	20
14	MVI-14	88.9	20
15	MVI-15	95.3	20
16	MVI-16	101.6	20

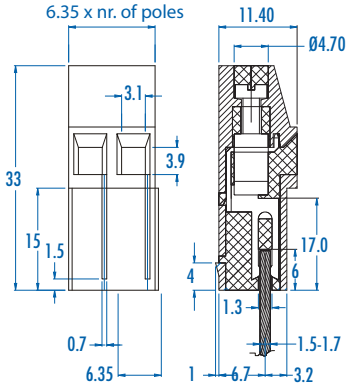

① 25A Factory Wiring - UL

Pin Spacing: 7.50mm
Orientation: Horizontal Plug
Clamp Type: Screw Cage
Design: Single Mold

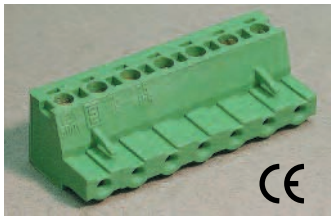

SHxx-7.50

ELECTRICAL

	Current	Voltage	Wire Range
cULus E178356	12A	300V	30-14AWG
IEC	16A	750V	2.5mm² Stranded 4.0mm² Solid

INSTALLATION DATA

Screw Size	M3	**PCB Hole Size**	–
Torque	0.5Nm (4.5 lbf-in.)	**Stripping Lgth.**	7.6mm

MATERIAL

Body	Polyamide	**Screw**	Galvanized Steel
Flammability Class	UL94V-0	**Terminal**	Nickeled Brass
Temperature Limit	105˚C UL 125˚C IEC	**Clamp**	Nickeled Brass
Color	Green		

No. Poles	Cat. #	Length (mm)	Std. Pk.
2	SH02-7.50	15.0	100
3	SH03-7.50	22.5	100
4	SH04-7.50	30.0	50
5	SH05-7.50	37.5	50
6	SH06-7.50	45.0	50
7	SH07-7.50	52.5	50
8	SH08-7.50	60.0	50
9	SH09-7.50	67.5	50
10	SH10-7.50	75.0	50
11	SH11-7.50	82.5	20
12	SH12-7.50	90.0	20
13	SH13-7.50	97.5	20
14	SH14-7.50	105.0	20
15	SH15-7.50	112.5	20
16	SH16-7.50	120.0	20

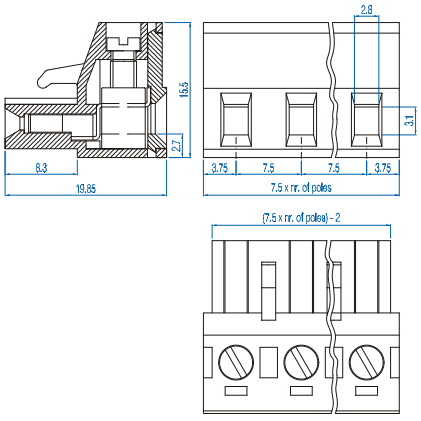

Pin Spacing: 7.50mm
Orientation: Vertical Header
Clamp Type: –
Design: Single Mold - Open End

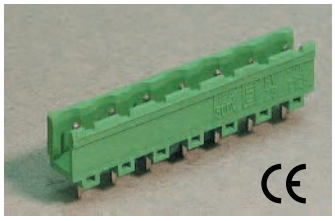

PVxx-7.50

ELECTRICAL

	Current	Voltage	Wire Range
cULus E178356	12A	300V	–
IEC	16A	750V	–

INSTALLATION DATA

Screw Size	–	**PCB Hole Size**	1.5mm
Torque	–	**Stripping Lgth.**	–

MATERIAL

Body	Polyamide	**Screw**	–
Flammability Class	UL94V-0	**Terminal**	Tin-Plated Brass
Temperature Limit	105˚C UL 125˚C IEC	**Clamp**	–
Color	Green		

No. Poles	Cat. #	Length (mm)	Std. Pk.
2	PV02-7.50	15.0	100
3	PV03-7.50	22.5	100
4	PV04-7.50	30.0	50
5	PV05-7.50	37.5	50
6	PV06-7.50	45.0	50
7	PV07-7.50	52.5	50
8	PV08-7.50	60.0	50
9	PV09-7.50	67.5	50
10	PV10-7.50	75.0	50
11	PV11-7.50	82.5	20
12	PV12-7.50	90.0	20
13	PV13-7.50	97.5	20
14	PV14-7.50	105.0	20
15	PV15-7.50	112.5	20
16	PV16-7.50	120.0	20

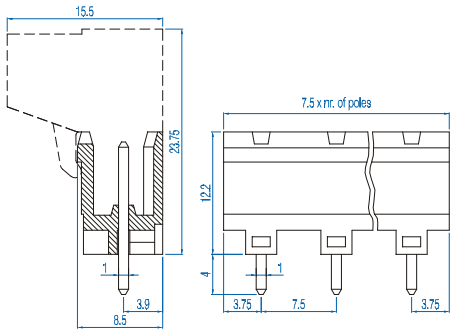

7.50mm Pin Spacing – Pluggable PCB Blocks

Pin Spacing: 7.50mm
Orientation: Horizontal Header
Clamp Type: –
Design: Single Mold - Open End

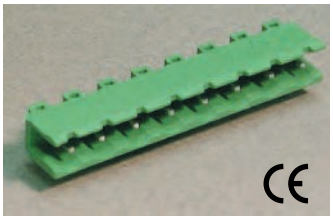

PHxx-7.50

ELECTRICAL

	Current	Voltage	Wire Range
cULus E178356	12A	300V	–
IEC	16A	750V	–

INSTALLATION DATA

Screw Size	–	**PCB Hole Size**	1.5mm
Torque	–	**Stripping Lgth.**	–

MATERIAL

Body	Polyamide	**Screw**	–
Flammability Class	UL94V-0	**Terminal**	Tin-Plated Brass
Temperature Limit	105˚C UL 125˚C IEC	**Clamp**	–
Color	Green		

No. Poles	Cat. #	Length (mm)	Std. Pk.
2	PH02-7.50	15.0	100
3	PH03-7.50	22.5	100
4	PH04-7.50	30.0	50
5	PH05-7.50	37.5	50
6	PH06-7.50	45.0	50
7	PH07-7.50	52.5	50
8	PH08-7.50	60.0	50
9	PH09-7.50	67.5	50
10	PH10-7.50	75.0	50
11	PH11-7.50	82.5	20
12	PH12-7.50	90.0	20
13	PH13-7.50	97.5	20
14	PH14-7.50	105.0	20
15	PH15-7.50	112.5	20
16	PH16-7.50	120.0	20

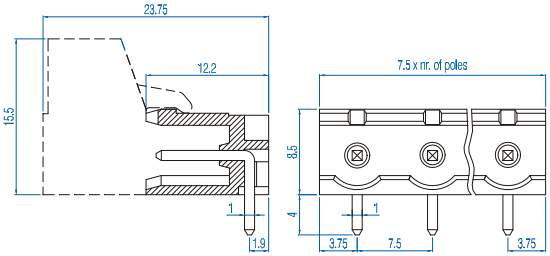

Pin Spacing: 7.50mm
Orientation: Vertical Header
Clamp Type: –
Design: Single Mold - Closed End

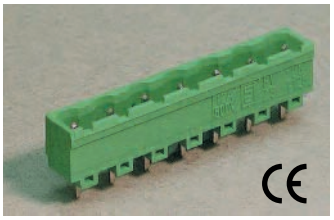

PVPxx-7.50

ELECTRICAL

	Current	Voltage	Wire Range
cULus E178356	12A	300V	–
IEC	16A	750V	–

INSTALLATION DATA

Screw Size	–	**PCB Hole Size**	1.5mm
Torque	–	**Stripping Lgth.**	–

MATERIAL

Body	Polyamide	**Screw**	–
Flammability Class	UL94V-0	**Terminal**	Tin-Plated Brass
Temperature Limit	105˚C UL 125˚C IEC	**Clamp**	–
Color	Green		

No. Poles	Cat. #	Length (mm)	Std. Pk.
2	PVP02-7.50	17.0	100
3	PVP03-7.50	24.5	100
4	PVP04-7.50	32.0	50
5	PVP05-7.50	39.5	50
6	PVP06-7.50	47.0	50
7	PVP07-7.50	54.5	50
8	PVP08-7.50	62.0	50
9	PVP09-7.50	69.5	50
10	PVP10-7.50	77.0	50
11	PVP11-7.50	84.5	20
12	PVP12-7.50	92.0	20
13	PVP13-7.50	99.5	20
14	PVP14-7.50	107.0	20
15	PVP15-7.50	114.5	20
16	PVP16-7.50	122.0	20

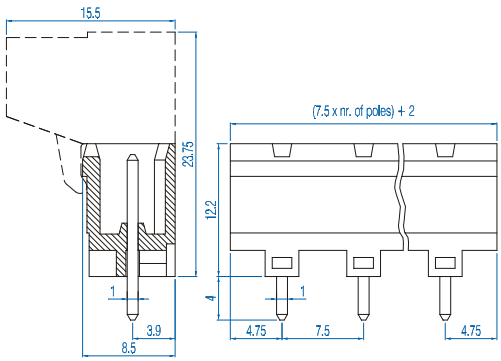

Pin Spacing: 7.50mm
Orientation: Horizontal Header
Clamp Type: –
Design: Single Mold - Closed End

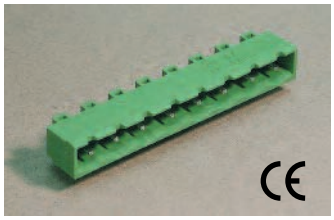

PHPxx-7.50

ELECTRICAL

	Current	Voltage	Wire Range
c UL us E178356	12A	300V	–
IEC	16A	750V	–

INSTALLATION DATA

Screw Size	–	**PCB Hole Size**	1.5mm
Torque	–	**Stripping Lgth.**	–

MATERIAL

Body	Polyamide	**Screw**	–
Flammability Class	UL94V-0	**Terminal**	Tin-Plated Brass
Temperature Limit	105˚C UL 125˚C IEC	**Clamp**	–
Color	Green		

No. Poles	Cat. #	Length (mm)	Std. Pk.
2	PHP02-7.50	17.0	100
3	PHP03-7.50	24.5	100
4	PHP04-7.50	32.0	50
5	PHP05-7.50	39.5	50
6	PHP06-7.50	47.0	50
7	PHP07-7.50	54.5	50
8	PHP08-7.50	62.0	50
9	PHP09-7.50	69.5	50
10	PHP10-7.50	77.0	50
11	PHP11-7.50	84.5	20
12	PHP12-7.50	92.0	20
13	PHP13-7.50	99.5	20
14	PHP14-7.50	107.0	20
15	PHP15-7.50	114.5	20
16	PHP16-7.50	122.0	20

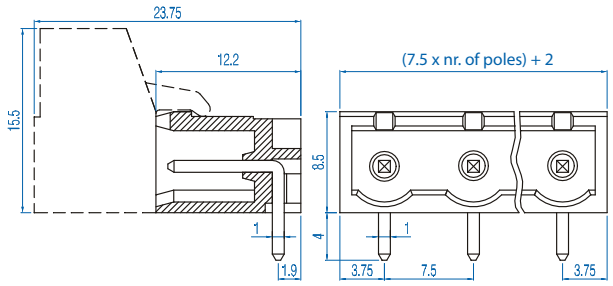

10.00mm Pin Spacing – Pluggable PCB Blocks

Pin Spacing: 10.00mm
Orientation: Horizontal Plug
Clamp Type: Screw Cage
Design: Single Mold

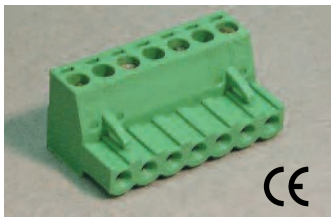

SHxx-10.00

ELECTRICAL

	Current	Voltage	Wire Range
c UL us E178356	12A	300V	30-14AWG
IEC	16A	750V	2.5mm² Stranded 4.0mm² Solid

INSTALLATION DATA

Screw Size	M3	**PCB Hole Size**	–
Torque	0.5Nm (4.5 lbf-in.)	**Stripping Lgth.**	7.5mm

MATERIAL

Body	Polyamide	**Screw**	Galvanized Steel
Flammability Class	UL94V-0	**Terminal**	Nickeled Brass
Temperature Limit	105˚C UL 125˚C IEC	**Clamp**	Nickeled Brass
Color	Green		

No. Poles	Cat. #	Length (mm)	Std. Pk.
2	SH02-10.00	15.0	100
3	SH03-10.00	25.0	100
4	SH04-10.00	35.0	50
5	SH05-10.00	45.0	50
6	SH06-10.00	55.0	50
7	SH07-10.00	65.0	50
8	SH08-10.00	75.0	50
9	SH09-10.00	85.0	50
10	SH10-10.00	95.0	50
11	SH11-10.00	105.0	20
12	SH12-10.00	115.0	20

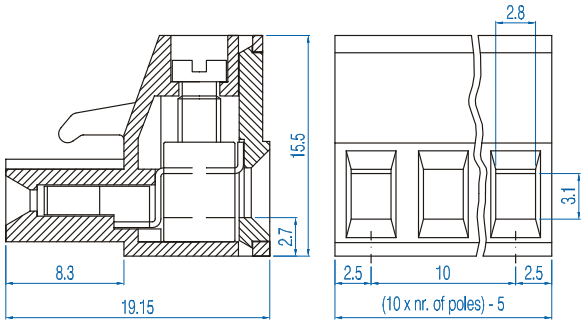

Pin Spacing: 10.00mm
Orientation: Vertical Header
Clamp Type: –
Design: Single Mold - Open End

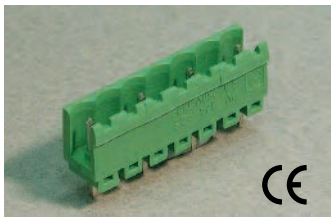

PVxx-10.00

ELECTRICAL

	Current	Voltage	Wire Range
c UL us E178356	12A	300V	–
IEC	16A	750V	–

INSTALLATION DATA

Screw Size	–	**PCB Hole Size**	1.5mm
Torque	–	**Stripping Lgth.**	–

MATERIAL

Body	Polyamide	**Screw**	–
Flammability Class	UL94V-0	**Terminal**	Tin-Plated Brass
Temperature Limit	105˚C UL 125˚C IEC	**Clamp**	–
Color	Green		

No. Poles	Cat. #	Length (mm)	Std. Pk.
2	PV02-10.00	15.0	100
3	PV03-10.00	25.0	100
4	PV04-10.00	35.0	50
5	PV05-10.00	45.0	50
6	PV06-10.00	55.0	50
7	PV07-10.00	65.0	50
8	PV08-10.00	75.0	50
9	PV09-10.00	85.0	50
10	PV10-10.00	95.0	50
11	PV11-10.00	105.0	20
12	PV12-10.00	115.0	20

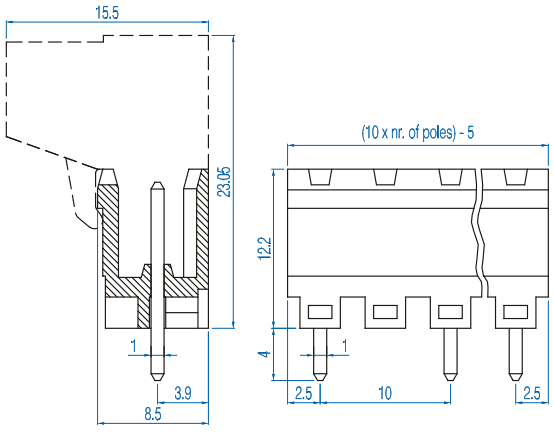

Pin Spacing: 10.00mm
Orientation: Horizontal Header
Clamp Type: –
Design: Single Mold - Open End

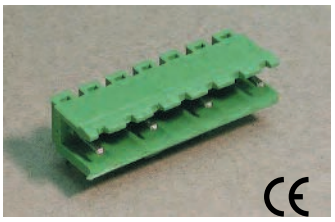

PHxx-10.00

ELECTRICAL

	Current	Voltage	Wire Range
c UL us E178356	12A	300V	–
IEC	16A	750V	–

INSTALLATION DATA

Screw Size	–	**PCB Hole Size**	1.5mm
Torque	–	**Stripping Lgth.**	–

MATERIAL

Body	Polyamide	**Screw**	–
Flammability Class	UL94V-0	**Terminal**	Tin-Plated Brass
Temperature Limit	105˚C UL 125˚C IEC	**Clamp**	–
Color	Green		

No. Poles	Cat. #	Length (mm)	Std. Pk.
2	PH02-10.00	15.0	100
3	PH03-10.00	25.0	100
4	PH04-10.00	35.0	50
5	PH05-10.00	45.0	50
6	PH06-10.00	55.0	50
5	PH05-10.00	65.0	50
8	PH08-10.00	75.0	50
9	PH09-10.00	85.0	50
10	PH10-10.00	95.0	50
11	PH11-10.00	105.0	20
12	PH12-10.00	115.0	20

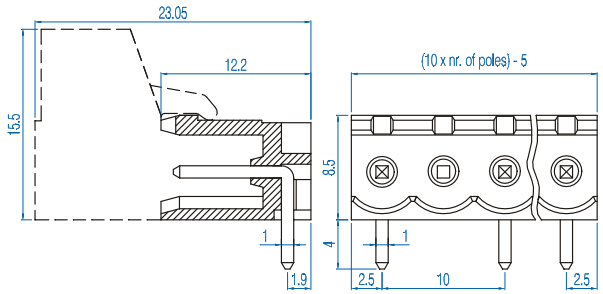

Pin Spacing: 10.00mm
Orientation: Vertical Header
Clamp Type: –
Design: Single Mold - Closed End

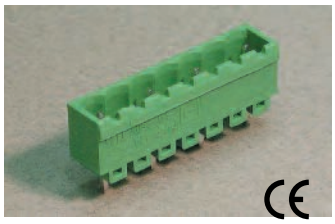

PVPxx-10.00

ELECTRICAL

	Current	Voltage	Wire Range
c UL us E178356	12A	300V	–
IEC	16A	750V	–

INSTALLATION DATA

Screw Size	–	**PCB Hole Size**	1.5mm
Torque	–	**Stripping Lgth.**	–

MATERIAL

Body	Polyamide	**Screw**	–
Flammability Class	UL94V-0	**Terminal**	Tin-Plated Brass
Temperature Limit	105˚C UL 125˚C IEC	**Clamp**	–
Color	Green		

No. Poles	Cat. #	Length (mm)	Std. Pk.
2	PVP02-10.00	17.0	100
3	PVP03-10.00	27.0	100
4	PVP04-10.00	37.0	50
7	PVP07-10.00	47.0	50
6	PVP06-10.00	57.0	50
7	PVP07-10.00	67.0	50
8	PVP08-10.00	77.0	50
9	PVP09-10.00	87.0	50
10	PVP10-10.00	97.0	50
11	PVP11-10.00	107.0	20
12	PVP12-10.00	117.0	20

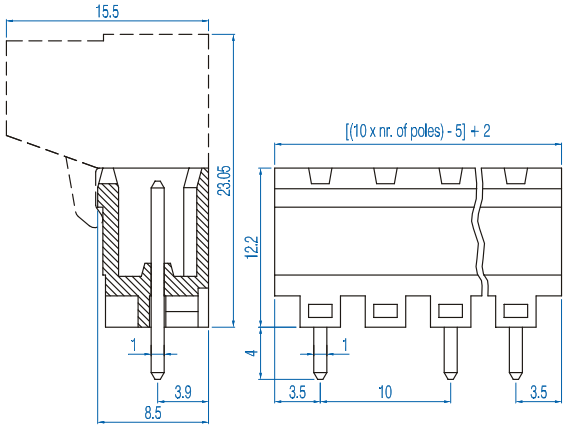

10.00mm Pin Spacing – Pluggable PCB Blocks

Pin Spacing: 10.00mm
Orientation: Horizontal Header
Clamp Type: –
Design: Single Mold - Closed End

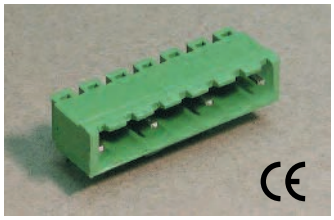

PHPxx-10.00

ELECTRICAL

	Current	Voltage	Wire Range
c UL us E178356	12A	300V	–
IEC	16A	750V	–

INSTALLATION DATA

Screw Size	–	**PCB Hole Size**	1.5mm
Torque	–	**Stripping Lgth.**	–

MATERIAL

Body	Polyamide	**Screw**	–
Flammability Class	UL94V-0	**Terminal**	Tin-Plated Brass
Temperature Limit	105˚C UL 125˚C IEC	**Clamp**	–
Color	Green		

No. Poles	Cat. #	Length (mm)	Std. Pk.
2	PHP02-10.00	17.0	100
3	PHP03-10.00	27.0	100
4	PHP04-10.00	37.0	50
7	PHP07-10.00	47.0	50
6	PHP06-10.00	57.0	50
7	PHP07-10.00	67.0	50
8	PHP08-10.00	77.0	50
9	PHP09-10.00	87.0	50
10	PHP10-10.00	97.0	50
11	PHP11-10.00	107.0	20
12	PHP12-10.00	117.0	20

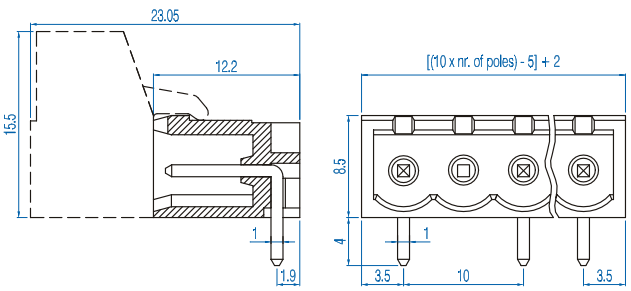

Pin Spacing: 10.16mm
Orientation: Horizontal Plug
Clamp Type: Screw Cage
Design: Single Mold

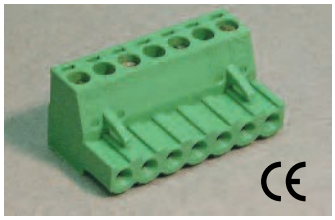

SHxx-10.16

ELECTRICAL

	Current	Voltage	Wire Range
cULus E178356	12A	300V	30-14AWG
IEC	16A	750V	2.5mm² Stranded 4.0mm² Solid

INSTALLATION DATA

Screw Size	M3	**PCB Hole Size**	–
Torque	0.5Nm (4.5 lbf-in.)	**Stripping Lgth.**	7.5mm

MATERIAL

Body	Polyamide	**Screw**	Galvanized Steel
Flammability Class	UL94V-0	**Terminal**	Nickeled Brass
Temperature Limit	105˚C UL 125˚C IEC	**Clamp**	Nickeled Brass
Color	Green		

No. Poles	Cat. #	Length (mm)	Std. Pk.
2	SH02-10.16	15.2	100
3	SH03-10.16	25.4	100
4	SH04-10.16	35.6	50
5	SH05-10.16	45.7	50
6	SH06-10.16	55.9	50
7	SH07-10.16	66.0	50
8	SH08-10.16	76.2	50
9	SH09-10.16	86.4	50
10	SH10-10.16	96.5	50
11	SH11-10.16	106.7	20
12	SH12-10.16	116.8	20

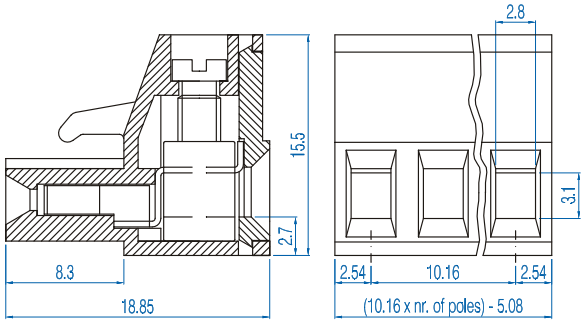

Pin Spacing: 10.16mm
Orientation: Vertical Plug
Clamp Type: Screw Cage
Design: Single Mold

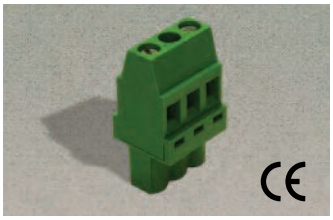

SVPxx-10.16

ELECTRICAL

	Current	Voltage	Wire Range
cULus E178356	12A	600V	30-14AWG
IEC	16A	750V	2.5mm² Stranded 4.0mm² Solid

INSTALLATION DATA

Screw Size	M3	**PCB Hole Size**	–
Torque	0.5Nm (4.5 lbf-in.)	**Stripping Lgth.**	7.5mm

MATERIAL

Body	Polyamide	**Screw**	Galvanized Steel
Flammability Class	UL94V-0	**Terminal**	Nickeled Brass
Temperature Limit	105˚C UL 125˚C IEC	**Clamp**	Nickeled Brass
Color	Green		

No. Poles	Cat. #	Length (mm)	Std. Pk.
2	SVP02-10.16	15.2	100
3	SVP03-10.16	25.4	100
4	SVP04-10.16	35.6	50
5	SVP05-10.16	45.7	50
6	SVP06-10.16	55.9	50
7	SVP07-10.16	66.0	50
8	SVP08-10.16	76.2	50
9	SVP09-10.16	86.4	50
10	SVP10-10.16	96.5	50
11	SVP11-10.16	106.7	20
12	SVP12-10.16	116.8	20

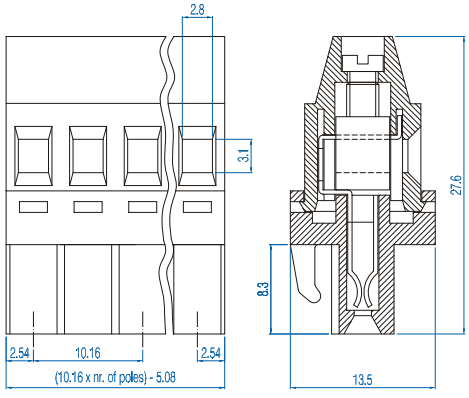

10.16mm Pin Spacing – Pluggable PCB Blocks

Pin Spacing: 10.16mm
Orientation: Vertical Plug
Clamp Type: Screw Cage
Design: Single Mold

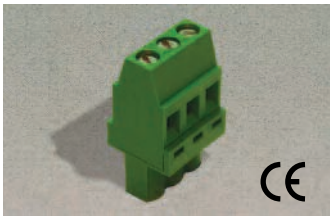

SVFxx-10.16

ELECTRICAL

	Current	Voltage	Wire Range
cULus E178356	12A	600V	30-14AWG
IEC	16A	750V	2.5mm² Stranded 4.0mm² Solid

INSTALLATION DATA

Screw Size	M3	**PCB Hole Size**	–
Torque	0.5Nm (4.5 lbf-in.)	**Stripping Lgth.**	7.5mm

MATERIAL

Body	Polyamide	**Screw**	Galvanized Steel
Flammability Class	UL94V-0	**Terminal**	Nickeled Brass
Temperature Limit	105˚C UL 125˚C IEC	**Clamp**	Nickeled Brass
Color	Green		

No. Poles	Cat. #	Length (mm)	Std. Pk.
2	SVF02-10.16	15.2	100
3	SVF03-10.16	25.4	100
4	SVF04-10.16	35.6	50
5	SVF05-10.16	45.7	50
6	SVF06-10.16	55.9	50
7	SVF07-10.16	66.0	50
8	SVF08-10.16	76.2	50
9	SVF09-10.16	86.4	50
10	SVF10-10.16	96.5	50
11	SVF11-10.16	106.7	20
12	SVF12-10.16	116.8	20

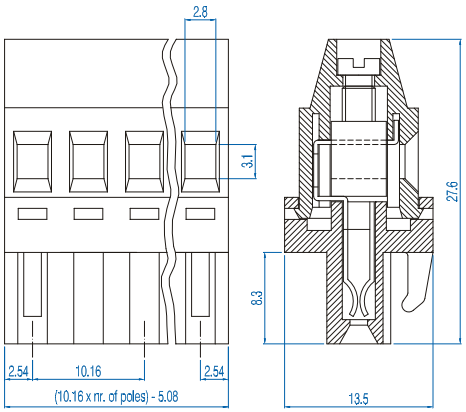

Pin Spacing: 10.16mm
Orientation: Horizontal Plug with Screw Flange
Clamp Type: Screw Cage
Design: Single Mold

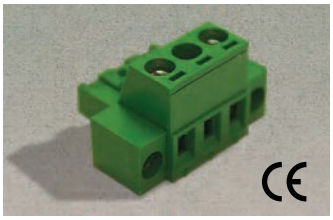

SHxx-10.16-K

ELECTRICAL

	Current	Voltage	Wire Range
cULus E178356	12A	600V	30-14AWG
IEC	16A	750V	2.5mm² Stranded 4.0mm² Solid

INSTALLATION DATA

Screw Size	M3	**PCB Hole Size**	–
Torque	0.5Nm (4.5 lbf-in.)	**Stripping Lgth.**	7.5mm

MATERIAL

Body	Polyamide	**Screw**	Galvanized Steel
Flammability Class	UL94V-0	**Terminal**	Nickeled Brass
Temperature Limit	105˚C UL 125˚C IEC	**Clamp**	Nickeled Brass
Color	Green		

No. Poles	Cat. #	Length (mm)	Std. Pk.
2	SH02-10.16-K	25.4	100
3	SH03-10.16-K	35.6	100
4	SH04-10.16-K	45.7	50
5	SH05-10.16-K	55.9	50
6	SH06-10.16-K	66.0	50
7	SH07-10.16-K	76.2	50
8	SH08-10.16-K	86.4	50
9	SH09-10.16-K	96.5	50
10	SH10-10.16-K	106.7	50
11	SH11-10.16-K	116.8	50

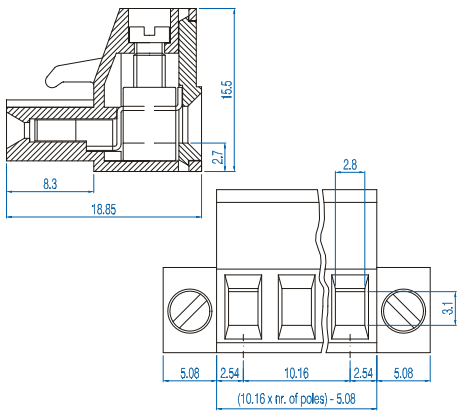

Pin Spacing: 10.16mm
Orientation: Vertical Header
Clamp Type: –
Design: Single Mold - Open End

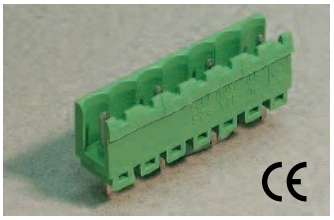

PVxx-10.16

ELECTRICAL

	Current	Voltage	Wire Range
c UL us E178356	12A	600V	–
IEC	16A	750V	–

INSTALLATION DATA

Screw Size	–	**PCB Hole Size**	1.5mm
Torque	–	**Stripping Lgth.**	–

MATERIAL

Body	Polyamide	**Screw**	–
Flammability Class	UL94V-0	**Terminal**	Tin-Plated Brass
Temperature Limit	105˚C UL 125˚C IEC	**Clamp**	–
Color	Green		

No. Poles	Cat. #	Length (mm)	Std. Pk.
2	PV02-10.16	15.2	100
3	PV03-10.16	25.4	100
4	PV04-10.16	35.6	50
5	PV05-10.16	45.7	50
6	PV06-10.16	55.9	50
7	PV07-10.16	66.0	50
8	PV08-10.16	76.2	50
9	PV09-10.16	86.4	50
10	PV10-10.16	96.5	50
11	PV11-10.16	106.7	20
12	PV12-10.16	116.8	20

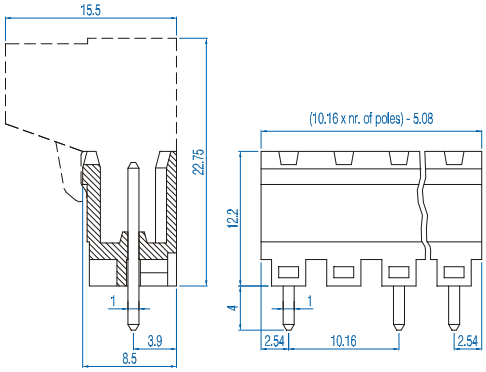

Pin Spacing: 10.16mm
Orientation: Horizontal Header
Clamp Type: –
Design: Single Mold - Open End

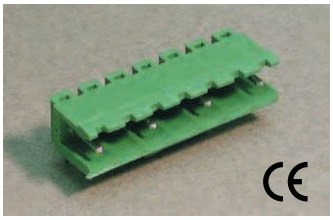

PHxx-10.16

ELECTRICAL

	Current	Voltage	Wire Range
c UL us E178356	12A	600V	–
IEC	16A	750V	–

INSTALLATION DATA

Screw Size	–	**PCB Hole Size**	1.5mm
Torque	–	**Stripping Lgth.**	–

MATERIAL

Body	Polyamide	**Screw**	–
Flammability Class	UL94V-0	**Terminal**	Tin-Plated Brass
Temperature Limit	105˚C UL 125˚C IEC	**Clamp**	–
Color	Green		

No. Poles	Cat #.	Length (mm)	Std Pk
2	PH02-10.16	15.2	100
3	PH03-10.16	25.4	100
4	PH04-10.16	35.6	50
5	PH05-10.16	45.7	50
6	PH06-10.16	55.9	50
7	PH07-10.16	66.0	50
8	PH08-10.16	76.2	50
9	PH09-10.16	86.4	50
10	PH10-10.16	96.5	50
11	PH11-10.16	106.7	20
12	PH12-10.16	116.8	20

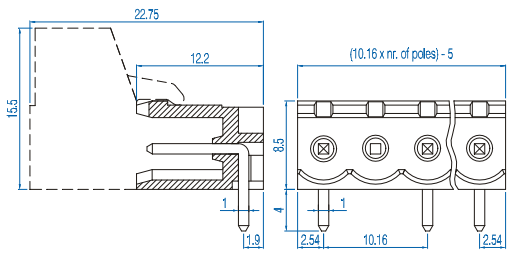

10.16mm Pin Spacing – Pluggable PCB Blocks

Pin Spacing: 10.16mm
Orientation: Vertical Header
Clamp Type: –
Design: Single Mold - Closed End

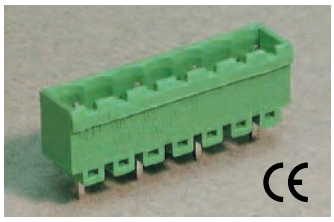

PVPxx-10.16

ELECTRICAL

	Current	Voltage	Wire Range
cULus E178356	12A	600V	–
IEC	16A	750V	–

INSTALLATION DATA

Screw Size	–	**PCB Hole Size**	1.5mm
Torque	–	**Stripping Lgth.**	–

MATERIAL

Body	Polyamide	**Screw**	–
Flammability Class	UL94V-0	**Terminal**	Tin-Plated Brass
Temperature Limit	105˚C UL 125˚C IEC	**Clamp**	–
Color	Green		

No. Poles	Cat. #	Length (mm)	Std. Pk.
2	PVP02-10.16	17.2	100
3	PVP03-10.16	27.4	100
4	PVP04-10.16	37.6	50
5	PVP05-10.16	47.7	50
6	PVP06-10.16	57.9	50
7	PVP07-10.16	68.0	50
8	PVP08-10.16	78.2	50
9	PVP09-10.16	88.4	50
10	PVP10-10.16	98.5	50
11	PVP11-10.16	108.7	20
12	PVP12-10.16	118.8	20

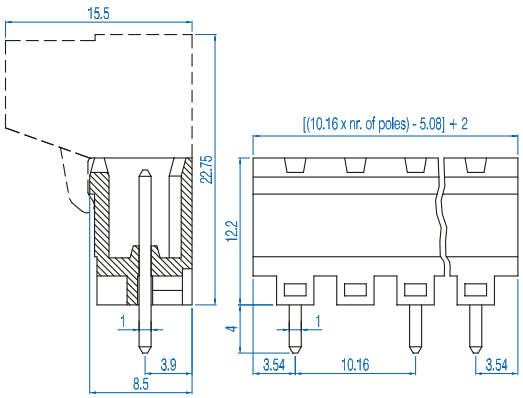

Pin Spacing: 10.16mm
Orientation: Horizontal Header
Clamp Type: –
Design: Single Mold - Closed End

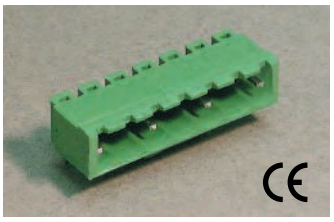

PHPxx-10.16

ELECTRICAL

	Current	Voltage	Wire Range
cULus E178356	12A	600V	–
IEC	16A	750V	–

INSTALLATION DATA

Screw Size	–	**PCB Hole Size**	1.5mm
Torque	–	**Stripping Lgth.**	–

MATERIAL

Body	Polyamide	**Screw**	–
Flammability Class	UL94V-0	**Terminal**	Tin-Plated Brass
Temperature Limit	105˚C UL 125˚C IEC	**Clamp**	–
Color	Green		

No. Poles	Cat. #	Length (mm)	Std. Pk.
2	PHP02-10.16	17.2	100
3	PHP03-10.16	27.4	100
4	PHP04-10.16	37.6	50
5	PHP05-10.16	47.7	50
6	PHP06-10.16	57.9	50
7	PHP07-10.16	68.0	50
8	PHP08-10.16	78.2	50
9	PHP09-10.16	88.4	50
10	PHP10-10.16	98.5	50
11	PHP11-10.16	108.7	20
12	PHP12-10.16	118.8	20

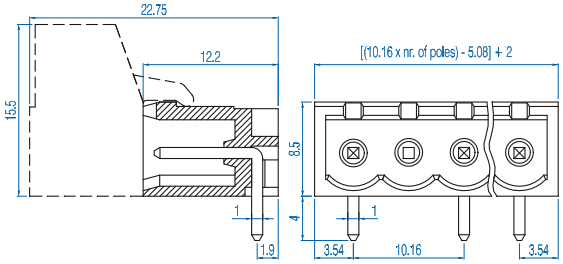

Pin Spacing: 10.16mm
Orientation: 45° Angle Header
Clamp Type: –
Design: Single Mold

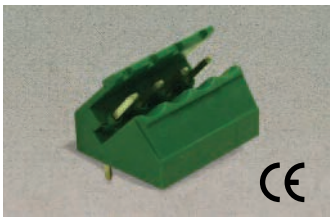

PIxx-10.16

ELECTRICAL

	Current	Voltage	Wire Range
cULus E178356	12A	600V	–
IEC	16A	750V	–

INSTALLATION DATA

Screw Size	–	**PCB Hole Size**	1.5mm
Torque	–	**Stripping Lgth.**	–

MATERIAL

Body	Polyamide	**Screw**	–
Flammability Class	UL94V-0	**Terminal**	Tin-Plated Brass
Temperature Limit	105˚C UL 125˚C IEC	**Clamp**	–
Color	Green		

No. Poles	Cat. #	Length (mm)	Std. Pk.
2	PI02-10.16	15.2	100
3	PI03-10.16	25.4	100
4	PI04-10.16	35.6	50
5	PI05-10.16	45.7	50
6	PI06-10.16	55.9	50
7	PI07-10.16	66.0	50
8	PI08-10.16	76.2	50
9	PI09-10.16	86.4	50
10	PI10-10.16	96.5	50
11	PI11-10.16	106.7	20
12	PI12-10.16	116.8	20

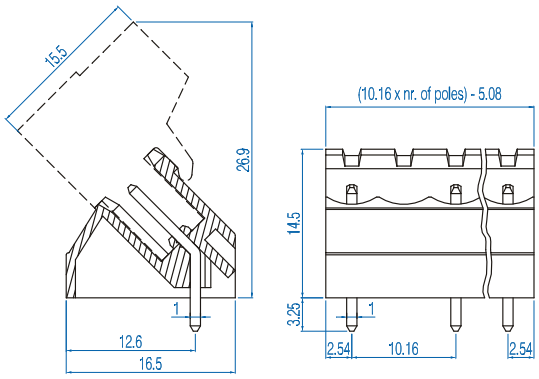

Pin Spacing: 10.16mm
Orientation: 45° Angle Header
Clamp Type: –
Design: Single Mold

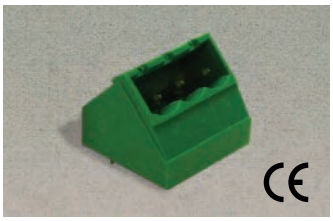

PIPxx-10.16

ELECTRICAL

	Current	Voltage	Wire Range
cULus E178356	12A	600V	–
IEC	16A	750V	–

INSTALLATION DATA

Screw Size	–	**PCB Hole Size**	1.5mm
Torque	–	**Stripping Lgth.**	–

MATERIAL

Body	Polyamide	**Screw**	–
Flammability Class	UL94V-0	**Terminal**	Tin-Plated Brass
Temperature Limit	105˚C UL 125˚C IEC	**Clamp**	–
Color	Green		

No. Poles	Cat. #	Length (mm)	Std. Pk.
2	PIP02-10.16	17.2	100
3	PIP03-10.16	27.4	100
4	PIP04-10.16	37.6	50
5	PIP05-10.16	47.7	50
6	PIP06-10.16	57.9	50
7	PIP07-10.16	68.0	50
8	PIP08-10.16	78.2	50
9	PIP09-10.16	88.4	50
10	PIP10-10.16	98.5	50
11	PIP11-10.16	108.7	20
12	PIP12-10.16	118.8	20

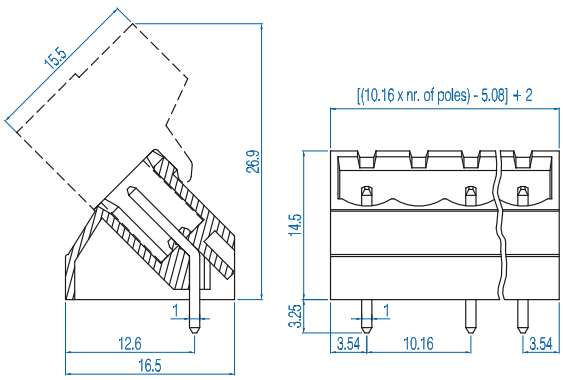

10.16mm Pin Spacing – Pluggable PCB Blocks

Pin Spacing: 10.16mm
Orientation: Vertical-Double Level Header
Clamp Type: –
Design: Modular - Open End

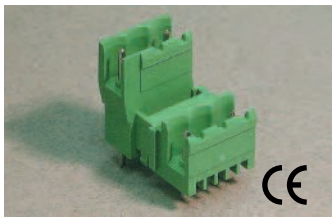

PDSVxx-10.16

ELECTRICAL

	Current	Voltage	Wire Range
cULus E178356	12A	600V	–
IEC	16A	750V	–

INSTALLATION DATA

Screw Size	–	**PCB Hole Size**	1.5mm
Torque	–	**Stripping Lgth.**	–

MATERIAL

Body	Polyamide	**Screw**	–
Flammability Class	UL94V-0	**Terminal**	Tin-Plated Brass
Temperature Limit	105˚C UL 125˚C IEC	**Clamp**	–
Color	Green		

No. Poles	Cat. #	Length (mm)	Std. Pk.
4	PDSV02-10.16	17.8	100
6	PDSV03-10.16	30.5	50
8	PDSV04-10.16	43.2	50
10	PDSV05-10.16	55.9	50
12	PDSV06-10.16	68.6	20
14	PDSV07-10.16	81.3	20
16	PDSV08-10.16	94.0	20
18	PDSV09-10.16	106.7	20
20	PDSV10-10.16	119.4	10
22	PDSV11-10.16	132.1	10
24	PDSV12-10.16	144.8	10

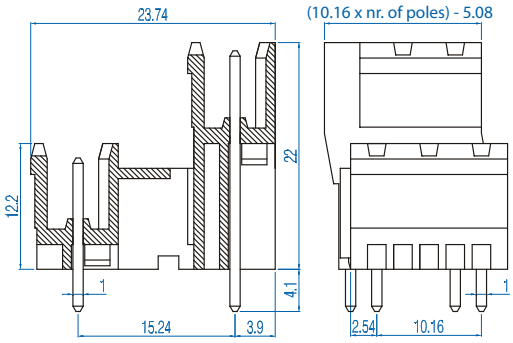

Pin Spacing: 10.16mm
Orientation: Horizontal-Double Level Header
Clamp Type: –
Design: Modular - Open End

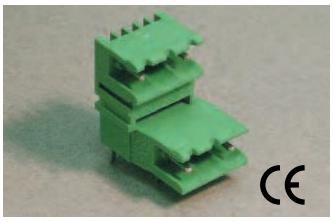

PDSHxx-10.16

ELECTRICAL

	Current	Voltage	Wire Range
cULus E178356	12A	600V	–
IEC	16A	750V	–

INSTALLATION DATA

Screw Size	–	**PCB Hole Size**	1.5mm
Torque	–	**Stripping Lgth.**	–

MATERIAL

Body	Polyamide	**Screw**	–
Flammability Class	UL94V-0	**Terminal**	Tin-Plated Brass
Temperature Limit	105˚C UL 125˚C IEC	**Clamp**	–
Color	Green		

No. Poles	Cat. #	Length (mm)	Std. Pk.
4	PDSH02-10.16	17.8	100
6	PDSH03-10.16	30.5	50
8	PDSH04-10.16	43.2	50
10	PDSH05-10.16	55.9	50
12	PDSH06-10.16	68.6	20
14	PDSH07-10.16	81.3	20
16	PDSH08-10.16	94.0	20
18	PDSH09-10.16	106.7	20
20	PDSH10-10.16	119.4	10
22	PDSH11-10.16	132.1	10
24	PDSH12-10.16	144.8	10

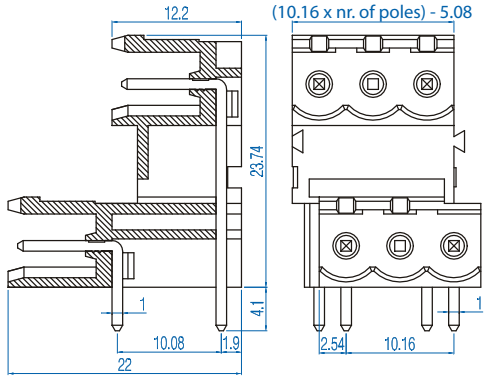

Pin Spacing: 10.16mm
Orientation: Vertical Header with Screw Flange
Clamp Type: Screw Cage
Design: Single Mold

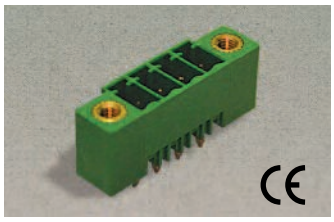

PVxx-10.16-K

ELECTRICAL

	Current	Voltage	Wire Range
cULus E178356	12A	600V	–
IEC	16A	750V	–

INSTALLATION DATA

Screw Size	–	**PCB Hole Size**	1.5mm
Torque	–	**Stripping Lgth.**	–

MATERIAL

Body	Polyamide	**Screw**	–
Flammability Class	UL94V-0	**Terminal**	Tin-Plated Brass
Temperature Limit	105˚C UL 125˚C IEC	**Clamp**	–
Color	Green		

No. Poles	Cat. #	Length (mm)	Std. Pk.
2	PV02-10.16-K	25.4	100
3	PV03-10.16-K	35.6	100
4	PV04-10.16-K	45.7	50
5	PV05-10.16-K	55.9	50
6	PV06-10.16-K	66.0	50
7	PV07-10.16-K	76.2	50
8	PV08-10.16-K	86.4	50
9	PV09-10.16-K	96.5	50
10	PV10-10.16-K	106.7	50
11	PV11-10.16-K	116.8	50

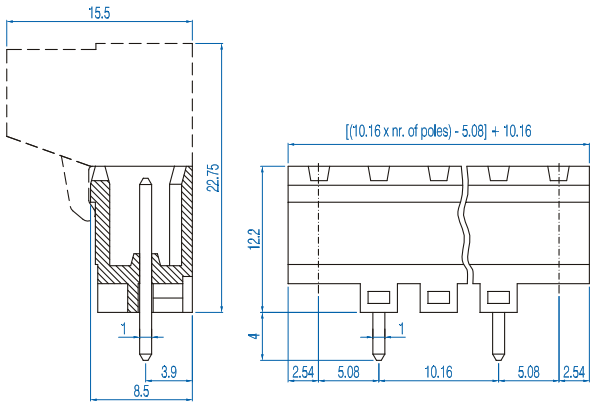

Pin Spacing: 10.16mm
Orientation: Horizontal Header with Screw Flange
Clamp Type: –
Design: Single Mold

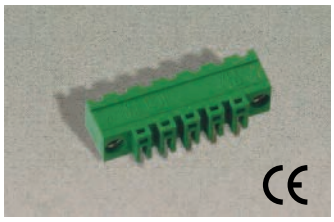

PHxx-10.16-K

ELECTRICAL

	Current	Voltage	Wire Range
cULus E178356	12A	600V	–
IEC	16A	750V	–

INSTALLATION DATA

Screw Size	–	**PCB Hole Size**	1.5mm
Torque	–	**Stripping Lgth.**	–

MATERIAL

Body	Polyamide	**Screw**	–
Flammability Class	UL94V-0	**Terminal**	Tin-Plated Brass
Temperature Limit	105˚C UL 125˚C IEC	**Clamp**	–
Color	Green		

No. Poles	Cat. #	Length (mm)	Std. Pk.
2	PH02-10.16-K	25.4	100
3	PH03-10.16-K	35.6	100
4	PH04-10.16-K	45.7	50
5	PH05-10.16-K	55.9	50
6	PH06-10.16-K	66.0	50
7	PH07-10.16-K	76.2	50
8	PH08-10.16-K	86.4	50
9	PH09-10.16-K	96.5	50
10	PH10-10.16-K	106.7	50
11	PH11-10.16-K	116.8	50

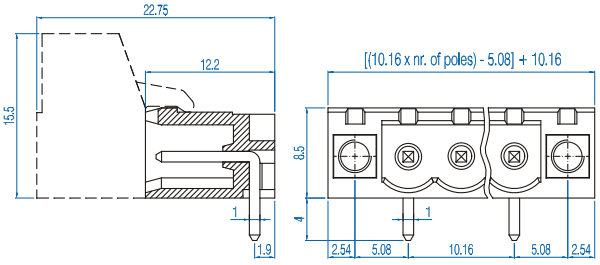

7.50 and 10.00mm Pin Spacing – Panel Mount

Pin Spacing: 7.50mm
Orientation: Panel Mount
Clamp Type: Screw Cage
Design: Modular

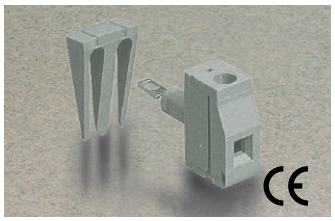

MPT-275/GY
CMR-75/GY

ELECTRICAL

	Current	Voltage	Wire Range
c UL us E178356	15A①	300V	30-14AWG
IEC	24A	450V	2.5mm² Stranded 4.0mm² Solid

INSTALLATION DATA

Screw Size	M3	**Panel Hole Size**	5.2mm
Torque	0.5Nm (4.5 lbf-in.)	**Stripping Lgth.**	10.1mm

MATERIAL

Body	Polyamide	**Screw**	Galvanized Steel
Flammability Class	UL94V-0	**Terminal**	Tin-Plated Brass
Temperature Limit	125˚C IEC	**Clamp**	Nickeled Brass
Color	Gray		

No. Poles	Cat. #	Length (mm)	Std. Pk.
1	MPT-275/GY	7.5	100
Retaining Key			
2	CMR-752/GY	14.8	50
3	CMR-753/GY	22.3	50

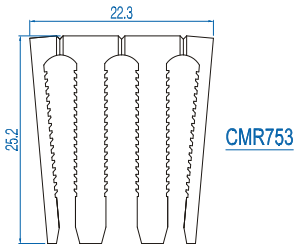

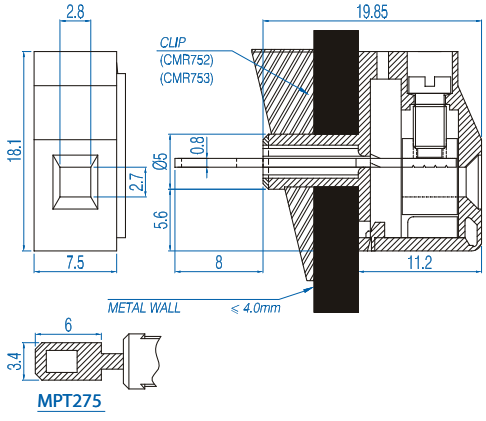

① 24A Factory Wiring - UL

Pin Spacing: 10.00mm
Orientation: Panel Mount
Clamp Type: Screw Cage
Design: Modular

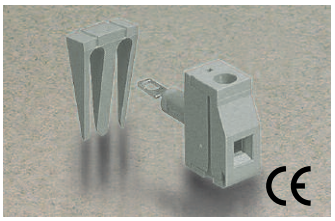

MPT-410/GY
CMR-10/GY

ELECTRICAL

	Current	Voltage	Wire Range
c UL us E178356	20A②	600V	30-12AWG
IEC	32A	450V	4.0mm² Stranded 6.0mm² Solid

INSTALLATION DATA

Screw Size	M3	**Panel Hole Size**	8.2mm
Torque	0.5Nm (4.5 lbf-in.)	**Stripping Lgth.**	10.1mm

MATERIAL

Body	Polyamide	**Screw**	Galvanized Steel
Flammability Class	UL94V-0	**Terminal**	Tin-Plated Brass
Temperature Limit	125˚C IEC	**Clamp**	Nickeled Brass
Color	Gray		

No. Poles	Cat. #	Length (mm)	Std. Pk.
1	MPT-410/GY	10.0	100
Retaining Key			
2	CMR-102/GY	19.8	50
3	CMR-103/GY	29.3	50

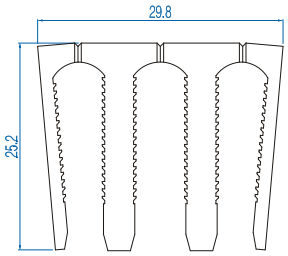

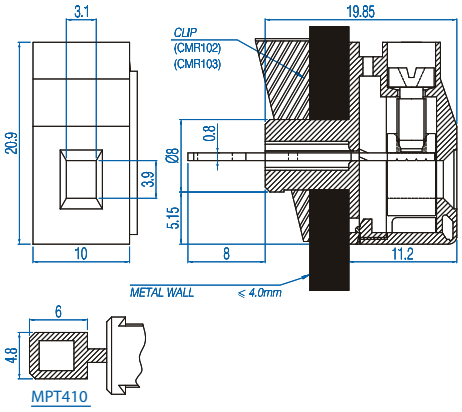

② 32A Factory Wiring - UL

Pin Spacing: 10.00mm
Orientation: Panel Mount
Clamp Type: Screw Cage
Design: Modular with nut

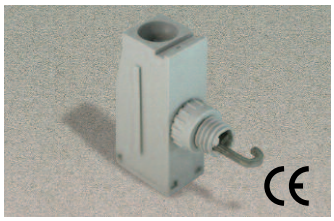

MPT-610-xx

ELECTRICAL

	Current	Voltage	Wire Range
cULus E178356	50A	600V	30-8 AWG
IEC	41A	750V	6.0mm² Stranded 10.0mm² Solid

INSTALLATION DATA

Screw Size	M4	**Panel Hole Size**	7.2mm
Torque	1.2Nm (10.8 lbf-in.)	**Stripping Lgth.**	13.4mm

MATERIAL

Body	Polyamide	**Screw**	Galvanized Steel
Flammability Class	UL94V-0	**Terminal**	Tin-Plated Brass
Temperature Limit	105°C UL 125°C IEC	**Clamp**	Nickeled Brass
Color	Gray		

No. Poles	Cat. #	Length (mm)	Std. Pk.
1	MPT-610-D	10.0	100
1	MPT-610-DP	10.0	100
1	MPT-610-DO	10.0	100

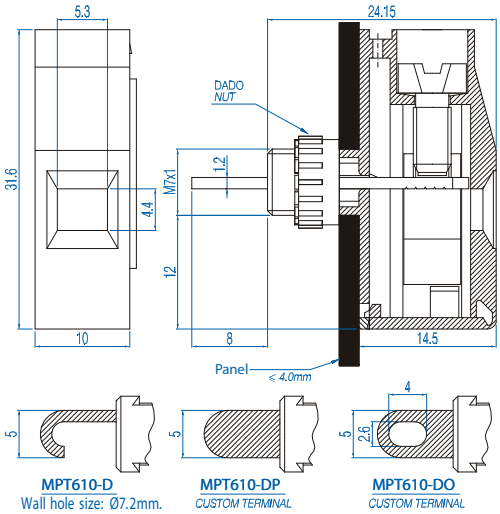

Pin Spacing: 10.00mm
Orientation: Panel Mount
Clamp Type: Screw Cage
Design: Modular with nut

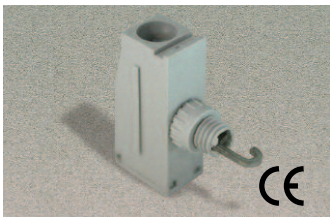

MPT-1010-xx

ELECTRICAL

	Current	Voltage	Wire Range
cULus E178356	65A	600V	30-6 AWG
IEC	57A	750V	10.0mm² Stranded 16.0mm² Solid

INSTALLATION DATA

Screw Size	M4	**Panel Hole Size**	7.2mm
Torque	1.2Nm (10.8 lbf-in.)	**Stripping Lgth.**	13.4mm

MATERIAL

Body	Polyamide	**Screw**	Galvanized Steel
Flammability Class	UL94V-0	**Terminal**	Tin-Plated Brass
Temperature Limit	105°C UL 125°C IEC	**Clamp**	Nickeled Brass
Color	Gray		

No. Poles	Cat. #	Length (mm)	Std. Pk.
1	MPT-1010-D	10.0	100
1	MPT-1010-DP	10.0	100
1	MPT-1010-DO	10.0	100

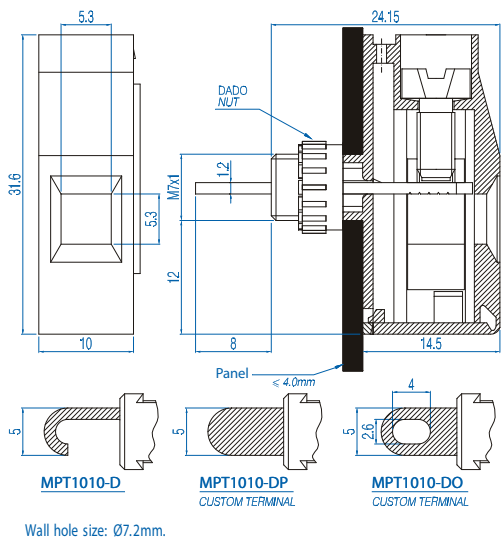

12.10mm Pin Spacing – Panel Mount

Pin Spacing: 12.10mm
Orientation: Panel Mount
Clamp Type: Screw Cage
Design: Modular with nut

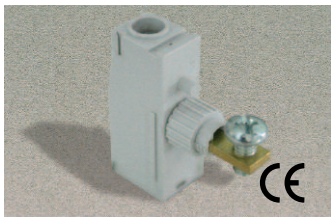

MPT-1612-x

ELECTRICAL

	Current	Voltage	Wire Range
c UL us E178356	85A	600V	30-11 AWG
IEC	76A	450V	16.0mm² Stranded 25.0mm² Solid

INSTALLATION DATA

Screw Size	M5	**Panel Hole Size**	9.2mm
Torque	2.0Nm (18.0 lbf-in.)	**Stripping Lgth.**	17.0mm

MATERIAL

Body	Polyamide	**Screw**	Galvanized Steel
Flammability Class	UL94V-0	**Terminal**	Tin-Plated Brass
Temperature Limit	105°C UL 125°C IEC	**Clamp**	Nickeled Brass
Color	Gray		

No. Poles	Cat. #	Length (mm)	Std. Pk.
1	MPT-1612	12.1	50
1	MPT-1612-O	12.1	50

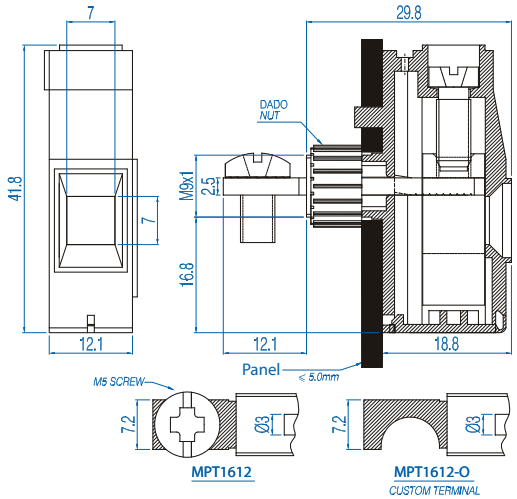

Wall hole size: Ø3.3mm / 10mm.

Coding Spline
Working Temp: 125°C
Color: Red
Body: PA66/6 UL94-Vo
Application: Plug-in Connectors

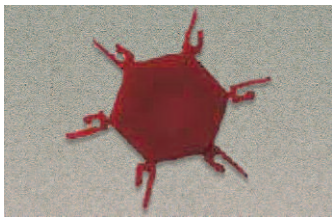

POL-P

Cat. #	Length (mm)	Std. Pk.
POL-P	7.90	30/5

Used for parts:

PVXX-5.00, 5.08, 7.50
PHXX-5.00, 5.08, 7.50
PVPXX-5.00, 5.08, 7.50
PHPXX-5.00, 5.08, 7.50
PDSHXX-5.00, 5.08
PDSVXX-5.00, 5.08
PDVXX-5.00, 5.08
PDHXX-5.00, 5.08
PIXX-5.00, 5.08
PIPXX-5.00, 5.08
SFXX-5.00, 5.08

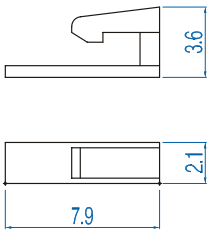

Coding Spline
Working Temp: 125°C
Color: Red
Body: PA66/6 UL94-Vo
Application: Plug-in Connectors

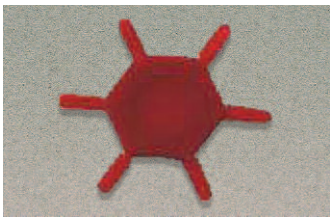

POL-S

Cat. #	Length (mm)	Std. Pk.
POL-S	7.90	30/5

Used for parts:

SHXX-5.00, 5.08, 7.50
PVPXX-3.50, 3.81
PHPXX-3.50, 3.81
SVFXX-5.08
SVP-5.08

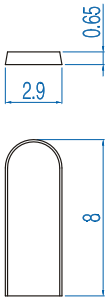

Jumpers, Adjacent
Working Temp: 125℃
Color: Green
Body: PA66/6 UL94-Vo
Application: Jumper Connection
Design: 5.08 Spacing Modular

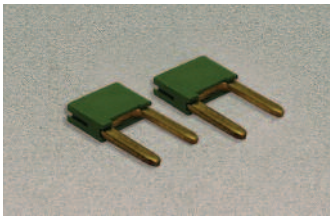

PT5

Cat. #	Length (B) (mm)	Std. Pk.
PT5	10.16	100

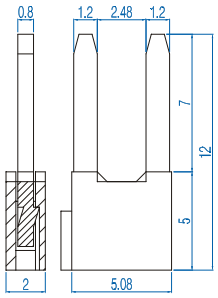

Jumpers, Alternate
Working Temp: 125℃
Color: Green
Body: PA66/6 UL94-Vo
Application: Jumper Connection
Design: 10.16 Spacing Modular

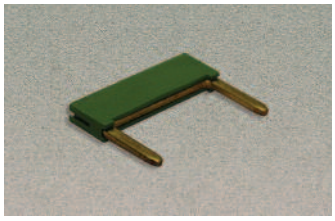

PT10

Cat. #	Length (B) (mm)	Std. Pk.
PT10	10.16	100

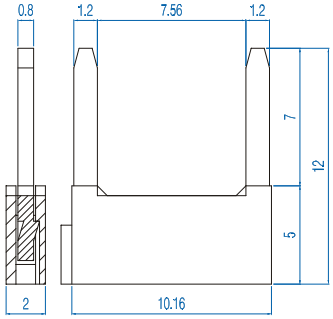

We still offer our original line of Printed Circuit Board Terminal Blocks.

Why is this good?

- Wider Selection & Availability
- Retain Original Circuit Designs
- Convenience

Ask your Altech Sales Representative for more information.

The Choice is Yours!

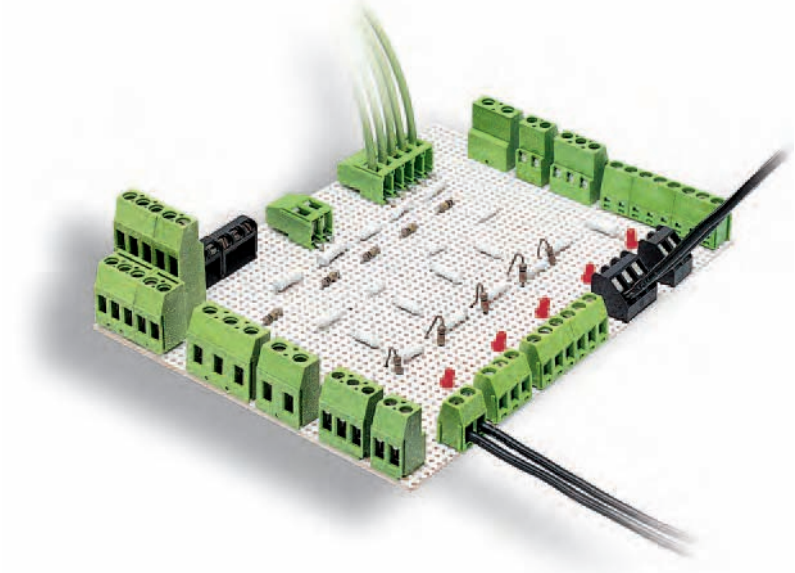

Because you can never have 2 many choices!

See Next Page

Original Printed Circuit Board Terminal Blocks

Fixed Printed Circuit
US Pin Spacing
Tubular Screw Clamp

AKZ500	Front Wire Entry
AK(Z)505	Top Wire Entry
AKZ120	Front Wire Entry
AKZ125	Top Wire Entry
AK(Z)110	Front Wire Entry

Fixed Printed Circuit
US Pin Spacing
Screw-Cage Clamp

AKZ300	45° Wire Entry
AKZ250	Front Wire Entry
AKZ350	Front Wire Entry
AKZ351	Front Wire Entry
AKZ700	Front Wire Entry
AKZ705	Top Wire Entry
AKZ750	Front Wire Entry
AKZ710	Front Wire Entry
AKZ800	Front Wire Entry
AKZ850	Front Wire Entry

Fixed Printed Circuit
US Pin Spacing
Dual Pin Screwless Spring Clamp

AK(Z)3000	45° Wire Entry without Lever
AK(Z)3001KD	45° Wire Entry with Grooved Push lever
AK(Z)3001FD	with Flat Push Lever

Pluggable Printed Circuit
US Pin Spacing
Tubular Screw Clamp Plug and Pin Headers

AK(Z)130	Modular Plug
AK(Z)132	Single Mold Plug
STL(Z)130	Straight Pin Header
STL(Z)140	Right Angle Pin Header
STL(Z)132	Straight Pin Header

Mini Pluggable Printed Circuit
US Pin Spacing
Screw-Cage Clamp Plug and Headers

AKZ1550	Wire Entry in Same Direction as Plug-In
STLZ1550-W	Horizontal - Closed End
STLZ1555-W	Vertical - Closed End

Standard Pluggable Printed Circuit
US Pin Spacing
Screw-Cage Clamp Plug

AKZ950	Wire Entry in Same Direction as Plug-In
AKZ960	Plug
BU02	Wire Entry Perpendicular to Plug-In
BU04	Wire Entry Perpendicular to Plug-In
AKZ1200	Wire Entry and Screws on Same Side as Plug-In

Standard Pluggable Printed Circuit
US Pin Spacing
Headers

STLZ950-W	Horizontal - Closed Ends
STLZ950-O	Horizontal - Open Ends
STLZ11-O	Horizontal - Open Ends
STLZ955-W	Vertical - Closed Ends
STLZ955-O	Vertical - Open Ends
STLZ990-W	Header, 45° - Closed Ends
STLZ990-O	Header, 45° - Open Ends
STLZ960-W	Horizontal Header - Closed Ends
STLZ965-W	Vertical Header - Closed Ends

Standard Pluggable Printed Circuit
US Pin Spacing
Double Level Headers

STLZ970-0	Horizontal - Open Ends
STLZ975-0	Vertical - Open Ends

Fixed Printed Circuit
Metric Pin Spacing
Tubular Screw Clamp

AK550	Front Wire Entry
AK555	Top Wire Entry
AK500	Front Wire Entry
AK505	Top Wire Entry
AK100	Front Wire Entry
AK105	Top Wire Entry
AK110	Front Wire Entry
AK115	Top Wire Entry
AK600	Front Wire Entry

Fixed Printed Circuit
Metric Pin Spacing
Screw-Cage Clamp

AK300	45° Wire Entry
AK(Z)250	Front Wire Entry
AK350	Front Wire Entry
AK351	Front Wire Entry
AK700	Front Wire Entry
AK705	Top Wire Entry
AK750	Top Wire Entry
AK790	Front Wire Entry
AK793	Front Wire Entry
AK710	Front Wire Entry
AK800	Front Wire Entry
AK850	Front Wire Entry

Fixed Printed Circuit
Metric Pin Spacing
Dual Pin Screwless Spring Clamp

AK3000	45° Wire Entry without Lever
AK3001KD	45° Wire Entry with Grooved Push Lever
AK3001FD	45° Wire Entry with Flat Push Lever

Pluggable Printed Circuit
Metric Pin Spacing
Tubular Screw Clamp Plug and Pin Headers

AK130	Modular Plug
AK132	Single Mold Plug
STL130	Straight Pin Header
STL140	Right Angle Pin Header
STL132	Straight Pin Header

Standard Pluggable Printed Circuit
Metric Pin Spacing
Screw-Cage Clamp Plug

AK950	Wire Entry in Same Direction as Plug-in
BU06	Wire Entry Perpendicular to Plug-in
BU08	Wire Entry Perpendicular to Plug-in

Pluggable Printed Circuit
Metric Pin Spacing
Headers

STL950-W	Horizontal - Closed Ends
STL950-O	Horizontal - Open Ends
STL955-W	Vertical - Closed Ends
STL955-O	Vertical - Open Ends

Ask your Altech Sales Representative for more information.

For high volume requirements or when it is impractical to apply PSA Marking Labels, use Hot Stamp Imprinting to provide positive circuit identification for Fixed and Pluggable Printed Circuit
Terminal Blocks. Properly identified circuits increase wiring efficiency, save installation time and make wire hook-up, system modifications and trouble shooting quick and easy.

Hot Stamp Imprinting provides a permanent marking which will not rub, wear or wash off even when solvents are present.

Standard or custom imprint sequences are available for 2 to 24 pole positions. Imprints are centered above the wire entry. A setup fee applies.

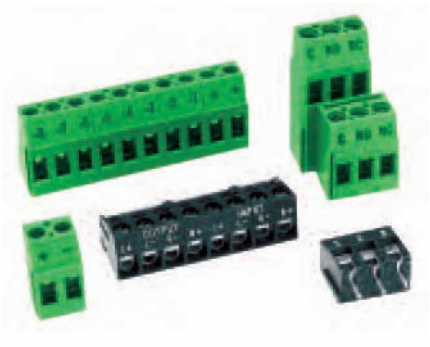

Standard Imprint

- Character Style example: LNLG
- Character Size: 8 Pt., 2.4mm (3/32 in.) high
- Standard Imprint Color: Black on Green
- Housing; White on Gray Housing
- Optional Imprint Color: White on Green Housing

Imprint Ordering

Standard Imprints can be specified and ordered by adding the required suffix after the Cat. No. and Type designation. Simply select the appropriate Ordering Suffix for the required Imprint Sequence.

Hot Stamp Imprints up to 12 poles are standard for US (inch) and metric (mm) spacings. For pricing purposes, they are considered to be one assembly.

Imprints with 13-24 poles are considered to be (2) assemblies. For pricing purposes, they are considered to be two assemblies.

Consult Altech for Hot Stamp Imprinting pricing, minimum order quantities and applicable lot charges.

Custom Imprints

Special number sequences and character combinations including letters, symbols and numbers are available. To order special sequences or combinations send us your imprint schedule. For die charges and minimum order quantities for your custom imprints, please consult Altech.

STANDARD IMPRINT

i A	(1, 2, 3, 4, ...)	Consecutive, Ascending, Left to Right	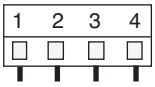
i B	(... 4, 3, 2, 1)	Consecutive, Descending Left to Right	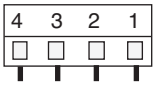
i C	(⋯ ,1 ,2 ,3 ,4)	Upside Down, Consecutive Descending, Left to Right	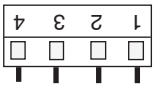
i D	(1, 2, 3, 4, ⋯)	Updside Down, Consecutive Ascending, Left to Right	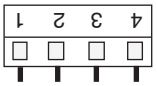

***Standard Imprint Example*:**
13 pole, Type MV-4612 Printed Circuit Terminal Block to be imprinted upside down with descending, consecutive numbers reading left to right should be ordered as below:

Type
MV-4612iA