# LEOAD128

Datasheet

## Rad-hard plastic 8-channel, 1 Msps 12-bit ADC

TSSOP-20

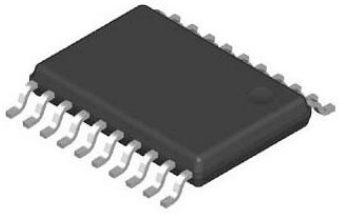

| Product status link |
| --- |
| LEOAD128 |

## Features

- 12-bit SAR architecture
- 1 Msps conversion rate
- 8-to-1-channel input MUX
- 3.3 V operating supply
- SPI, serial digital output
- Power-down function
- Nickel/palladium/gold-lead-finished (NiPdAu), whisker-free
- Gold-wires
- RML <1% and CVCM <0.1% guaranteed outgassing
- 50 krad (Si) total ionizing dose
- SEL-free up to 62.5 MeV.cm²/mg
- Mass: 80 mg
- Compliant with ST-LEO-specification

## Applications

- Low earth orbit (LEO) applications, telemetry, housekeeping

## Description

The LEOAD128 is a low power, multiplexed 8-input pure CMOS 12-bit analog-to-digital converter specified for conversion from 50 ksps to 1 Msps. The architecture is based on a successive-approximation register with internal track-and-hold. The output serial data is straight binary and is compatible with SPI™.

The analog and digital power supplies operate from 2.7 V to 3.6 V, drawing a current consumption of only 2 mA maximum.

The LEOAD128 can operate over a large temperature range of -40 °C to +125 °C and it is housed in plastic TSSOP-20, thin-shrink small outline package, 20 leads, using golden bonding and nickel/palladium/golden-lead-finishing to prevent from whiskers.

The LEOAD128 is compliant with the ST-LEO-specification, dedicated specification for space-ready rad-hard plastic products. This AEC-Q100-based specification offers a specific trade-off among footprint size savings, cost of ownership and quality assurance together with radiation hardness and large quantity capability.

# 1 Functional description

Figure 1. **Pin connections (top view)**

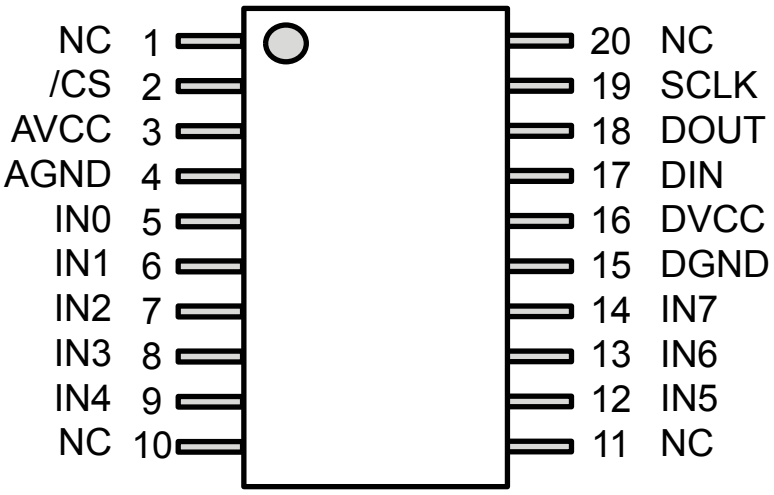


NC: not internally connected.
The pin can be externally connected to any potential.

Figure 2. **Block diagram**

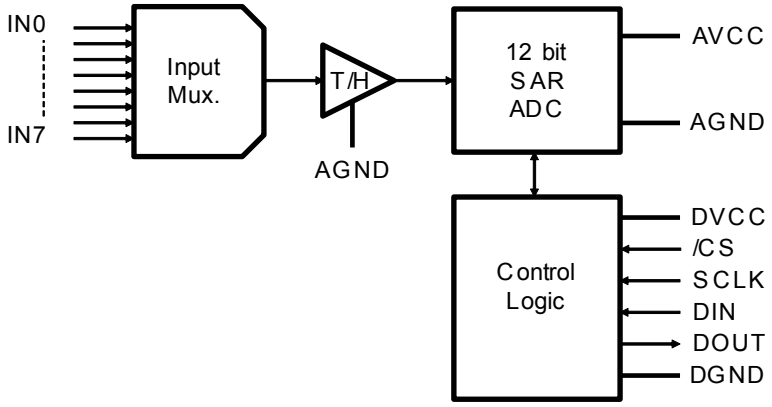

**Table 1. Control register bits**

| Bit | 7 (MSB) | 6 | 5 | 4 | 3 | 2 | 1 | 0 |
|---|---|---|---|---|---|---|---|---|
| Symbol | Any code except 11 | | ADD2 | ADD1 | ADD0 | Any code except 001 | | |

**Table 2. Control register bit description**

| Bit | Symbol | Description |
|---|---|---|
| 7, 6, 2, 1, 0 | DONTC | Do not care, except forbidden codes provided in Table 1. Control register bits |
| 5 | ADD2 | They determine which input channel to be converted, as per Table 3. Input channel description. |
| 4 | ADD1 | |
| 3 | ADD0 | |

**Table 3. Input channel description**

| ADD2 | ADD1 | ADD0 | Input channel |
|---|---|---|---|
| 0 | 0 | 0 | IN0 |
| 0 | 0 | 1 | IN1 |
| 0 | 1 | 0 | IN2 |
| 0 | 1 | 1 | IN3 |
| 1 | 0 | 0 | IN4 |
| 1 | 0 | 1 | IN5 |
| 1 | 1 | 0 | IN6 |
| 1 | 1 | 1 | IN7 |

# 2 Maximum ratings and operating conditions

**Table 4. Absolute maximum ratings**

| Symbol | Parameter | Value | Unit |
|---|---|---|---|
| AVCC(1) | Maximum analog power supply between AVCC and AGND | -0.3 to 4.8 | V |
| DVCC(1) | Maximum digital power supply between DVCC and DGND | -0.3 to AVCC+0.3 (and 4.8 V max.) | V |
| Vi(2) | Max. voltage on any pin vs. GND | -0.3 to AVCC+0.3 (and 4.8 V max.) | V |
| Ii | Max input current at any pin | +/-10 | mA |
| $T_{stg}$ | Maximum temperature storage | -65 to +150 | °C |
| $T_j$ | Maximum junction temperature | +150 | °C |
| $R_{th}$(3) | Junction-to-ambient thermal resistance (Θja) | 80 | °C/W |
| | Junction-to-case thermal resistance (Θjc) | 17 | °C/W |
| ESD | HBM (human body model) | 4 k | V |
| | CDM (charged device model) | 1 k | |

1. *All voltages, except differential I/O bus voltage, are with respect to the network ground terminal.*
2. *When the input voltage at any pin exceeds the power supplies (that is VIN < AGND or VIN > AVCC or DVCC), the current at that pin should be limited to 10 mA. The 20 mA maximum package input current rating limits the number of pins that can safely exceed the power supplies with an input current of 10 mA to two.*
3. *Short-circuits can cause excessive heating. Destructive dissipation can result from short-circuits on the amplifiers.*

*Note: Absolute maximum ratings are those values beyond which damage to the device may occur. Functional operation under these conditions is not implied. All values are referred to GND.*

**Table 5. Operating conditions**

| Symbol | Parameter | Min. | Max. | Unit |
|---|---|---|---|---|
| AVCC | Analog supply voltage | 2.7 | 3.6 | V |
| DVCC | Digital supply voltage | AVCC - 0.15 V | AVCC + 0.15 V | V |
| VINA | Analog input voltage range | 0 | AVCC | V |
| VIND | Digital input voltage | 0 | AVCC | V |
| SCLK | Clock frequency | 0.8 | 16 | MHz |
| $T_a$ | Ambient temperature range | -40 | +125 | °C |

*Note: All unused inputs must be held at VCC or GND to ensure proper device operation.*

# 3 Electrical characteristics

AVCC = DVCC = +3.3 V, AGND = DGND = 0 V, $f_{SCLK}$ = 16 MHz, $f_{SAMPLE}$ = 1 Msps, CL = 25 pF, typ. values at +25 °C, min./max. values at -40 °C and 125 °C, unless otherwise specified.

**Table 6. Electrical characteristics**

| Symbol | Parameters | Test conditions | Min. | Typ. | Max. | Unit |
|---|---|---|---|---|---|---|
| **Static characteristics** | | | | | | |
| | Resolution with no missing codes | | | | 12 | Bits |
| INL | Integral non-linearity (end point method) | | −1.1 | ±0.4 | 1.1 | LSB |
| DNL | Differential non-linearity | | -0.9 | ±0.4 | 0.9 | LSB |
| VOFF | Offset error | | −2.3 | 0.8 | 2.3 | LSB |
| OEM | Offset error match | | | 0.8 | | LSB |
| FSE | Full scale error | | −2.3 | 0.8 | 2.3 | LSB |
| FSEM | Full scale error match | | | 0.8 | | LSB |
| **Dynamic characteristics** | | | | | | |
| ENOB | Effective number of bits | FIN = 40.2 kHz, −0.02 dBFS | 11.1 | 11.7 | | Bits |
| SINAD | Signal-to-noise plus distortion ratio (0 to Fs/2) | FIN = 40.2 kHz, −0.02 dBFS | 68.9 | 72 | | dB |
| SNR | Signal-to-noise ratio (0 to Fs/2) | FIN = 40.2 kHz, −0.02 dBFS | 71 | 73 | | dB |
| THD | Total harmonic distortion | FIN = 40.2 kHz, −0.02 dBFS | | −80 | −73 | dB |
| SFDR | Spurious-free dynamic range (0 to Fs/2) | FIN = 40.2 kHz, −0.02 dBFS | 74 | 81 | | dB |
| ISO | Channel-to-channel isolation | FIN = 20 kHz, −0.02 dBFS | | 84 | | dB |
| IM2 | 2nd order intermodulation | fa = 19.5 kHz, fb = 20.5 kHz<br>VINA = VINB = -6.02 dBFS | | −90 | | dB |
| IM3 | 3rd order intermodulation | fa = 19.5 kHz, fb = 20.5 kHz<br>VINA = VINB = -6.02 dBFS | | −90 | | dB |
| **Analog input characteristics** | | | | | | |
| IDCL | | | -1 | | +1 | µA |
| CINA | Input capacitance | Track mode | | 45 | | pF |
| | | Hold mode | | 4.5 | | |
| **Digital input characteristics** | | | | | | |
| VIH | Input high voltage | AVCC = DVCC = +2.7 V to +3.6 V | 2.1 | | | V |
| VIL | Input low voltage | AVCC = DVCC = +2.7 V to +3.6 V | | | 0.8 | V |
| IIN | Digital input current | VIN = 0V or DVCC | -1 | | +1 | µA |
| CIND | Digital input capacitance | | | 4.5 | | pF |
| **Digital output characteristics (output coding: straight (natural) binary)** | | | | | | |
| VOH | Output high voltage | $I_{source}$ = 200 µA<br>AVCC = DVCC = +2.7 V to +3.6 V | 2.8 | | | V |
| VOL | Output low voltage | Isink = 200 µA to 1.0 mA, | | | 0.4 | V |

| Symbol | Parameters | Test conditions | Min. | Typ. | Max. | Unit |
|---|---|---|---|---|---|---|
| | | AVCC = DVCC = +2.7 V to +3.6 V | | | | |
| IOZH, IOZL | High impedance output leakage current | AVCC = DVCC = +2.7 V to +3.6 V | -1 | | +1 | µA |
| COUT | High-impedance output capacitance | | | 4.5 | | pF |
| **Power supply characteristics, CL=10 pF** | | | | | | |
| IAVCC + IDVCC | Total supply current, normal mode (/CS low) | AVCC = DVCC = +2.7 V to +3.6 V, $f_S$ = 1 MSPS, FIN = 40 kHz | | 0.9 | 2 | mA |
| | Total supply current,shutdown mode (/CS high) | AVCC = DVCC = +2.7 V to +3.6 V, $f_S$ = 0 | | 0.11 | 10 | µA |
| **Clocking characteristics, AVCC = DVCC = +2.7 V to +3.6 V** | | | | | | |
| $t_{CONVERT}$ | Conversion (hold) time | | | | 13 | SCLK cycles |
| DC | SCLK duty cycle | | 40 | | 60 | % |
| $t_{ACQ}$ | Acquisition (track) time cycles | See Section 4: Timing diagrams | | | 3 | SCLK cycles |
| | Throughput time acquisition time + conversion time | | | | 16 | SCLK cycles |
| $t_{AD}$ | Aperture delay | | | 4 | | ns |
| **Timing specifications, AVCC = DVCC = +2.7 V to +3.6 V** | | | | | | |
| $t_{CSH}$(2) | /CS hold time after SCLK rising edge | | 10 | | | ns |
| $t_{CSS}$(2) | /CS setup time prior SCLK rising edge | | 10 | | | |
| $t_{EN}$ | /CSfalling edge to DOUT enabled | | | | 30 | ns |
| $t_{DACC}$ | DOUT access time after SCLK falling edge | | | | 27 | ns |
| $t_{DHLD}$ | DOUT hold time after SCLK falling edge | | 7 | | | ns |
| $t_{DS}$ | DIN set-up time prior to SCLK rising edge | | 10 | | | ns |
| $t_{DH}$ | DIN hold time after SCLK rising edge | | 10 | | | ns |
| $t_{CH}$ | Min. SCLK high time | | 0.4 x $t_{SCLK}$ | | | ns |
| $t_{CL}$ | Min. SCLK low time | | 0.4 x $t_{SCLK}$ | | | ns |
| $t_{DIS}$ | /CS rising edge to DOUT high-impedance | DOUT falling | | | 20 | ns |
| | | DOUT rising | | | 20 | ns |

1. *Limits are guaranteed by functional test.*
2. *Clock may be in any state (high or low) when /CS goes high. Set-up and hold time restrictions apply only to /CS going low.*

# 4 Timing diagrams

Figure 3. **Operational timing diagram**

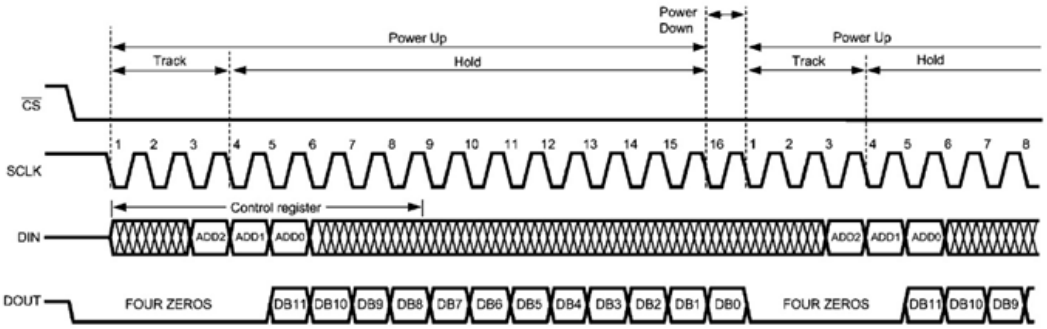


Figure 4. **Serial timing diagram**

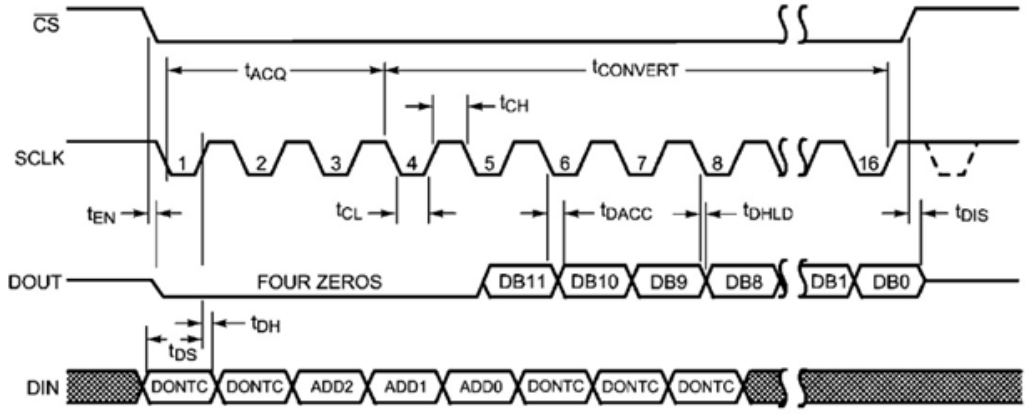


Figure 5. **SCLK and /CS timing parameters**

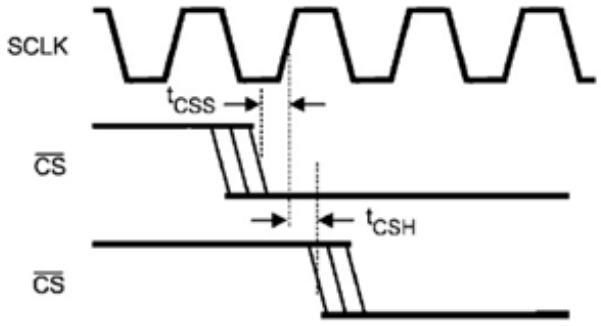

# 5 Radiations

**Total ionizing dose (TID):**

For the qualification, the product is characterized in TID as per MIL-STD-883 TM 1019 up to 50 krad(Si) on 5 biased parts at high dose rate (between 50 and 300 rad(Si)/s), such a rate being the worst condition for a pure CMOS technology.

All parameters provided in Table 6. Electrical characteristics apply to both pre- and post-irradiation.

Each new production lot is tested at high dose rate as per MIL-STD-883 TM 1019 on 5 parts.

**Heavy-ions:**

Single event latchup (SEL) is characterized at 125 °C at a LET of 62.5 MeV.cm2/mg. The test shows the product is immune to heavy ions at this LET. Heavy-ion trials are performed on qualification lots only.

The results in radiation are summarized in Table 7. Radiations as follows:

**Table 7. Radiations**

| Symbol | Characteristics | Value |
|---|---|---|
| TID (1) | • High-dose rate (50-to-300 rad (Si)/s)<br>• Temperature: 25 °C<br>• Performed on 5 biased parts | Within Table 6. Electrical characteristics up to 50 krad(Si) |
| SEL(2) | • LET: 62.5 MeV.cm2/mg (Xenon ions)<br>• Temperature: 125 °C<br>• Fluence: 1 x $10^7$ ions/$cm^2$ (10 million of particles per $cm^2$)<br>• Normal incidence | Immune to SEL up to 62.5 MeV.$cm^2$/mg |

1. *A total ionizing dose (TID) of 50 krad(Si) is equivalent to 500 Gy(Si), (1 gray = 100 rad).*
2. *SEL: single event latchup.*

# 6 Outgassing

| Specification (tested per ASTM E 595) | Value | Unit |
|---|---|---|
| Recovered mass loss (RML)[1] | 0.06 | % |
| Collected volatile condensable material (CVCM)[2] | 0.00 | % |

1. *RML < 1%.*
2. *CVCM < 0.1%.*

# 7 PCB precautions

- A ground plane on each layer of the PCB with multiple vias dedicated for interconnexion is recommended for high-speed circuit applications to provide low parasitic inductance and resistance. The goal is to have a “common ground plane” where AGND and DGND are connected with the lowest DC resistance and lowest AC impedance.
- The separation of the analog signal from the digital output is mandatory to prevent noise from coupling onto the input signal.
- Power supply bypass capacitors must be placed as close as possible to the IC pins to improve high-frequency bypassing and reduce harmonic distortion.
- All leads must be as short as possible, especially for the analog input, so to decrease parasitic capacitance and inductance.
- To minimize the transition current when the output changes, the capacitive load at the digital outputs must be reduced as much as possible by using the shortest possible routing tracks. One way to reduce capacitive load is to remove the ground plane under the output digital pins and layers at high sampling frequencies.
- Choose the smallest possible component sizes (SMD).

# 8 Definitions

The "acquisition time" is the time required to get the input voltage. During this time, the hold capacitor is charged by the input voltage.

The "aperture delay" is the time between the fourth falling edge of SCLK and the time when the input signal is internally acquired or held for conversion.

Channel-to-channel isolation is the residual noise injected on the selected channel by other unselected channels.

The "conversion time" is the time required, after the input voltage is acquired, to convert the input voltage to a digital word.

"Differential non-linearity" (DNL) is the maximum deviation from the ideal step size of 1 LSB.

Duty cycle is the ratio, for a periodic digital signal, of the high level duration divided by the total period.

Effective number of bits (ENOB) is a method of specifying signal-to-noise and distortion or SINAD. ENOB is defined as (SINAD - 1.76) / 6.02 and says that the converter is equivalent to a perfect ADC of this (ENOB) number of bits.

Full power bandwidth is a measure of the frequency at which the reconstructed output fundamental drops 3 dB below its low frequency value for a full scale input.

Full scale error (single-ended input) is the deviation of the last code transition (111...110) to (111...111) from the ideal (AVCC -1LSB), after offset error is fixed.

Positive full scale error (differential input) is the deviation of the last code transition (111...110) to (111...111) from the ideal (AVCC -1LSB), after offset error is fixed.

Negative full scale error (differential input) is the deviation of the last code transition (111...110) to (111...111) from the ideal (-AVCC +1LSB), after offset error is fixed.

Integral non-linearity (INL) is the deviation of each individual code from a line drawn from negative full scale (½ LSB below the first code transition) through positive full scale (½ LSB above the last code transition). The deviation of any given code from this straight line is measured from the center of that code value.

Intermodulation distortion (IMD) is the result of the product of two pure sinewaves at frequency fa and fb applied to the ADC input. To avoid clipping when the sinewave is in phase, the level must be just below -6 dBFS. Assuming that the level of the two tones is equal, IMD2 is the difference in dBc between level(fa or fb) and level(fa ± fb). IMD3 is is the difference in dBc between level(fa or fb) and level(2fa ± fb) or level(fa ± 2fb).

Missing codes are those output codes that never appear at the ADC outputs. The RH-AD128 is guaranteed not to have any missing code.

Offset error (single-ended input) is the deviation of the first code transition (000...000) to (000...001) from the ideal (i.e. GND +1 LSB).

Offset error (differential input) is the deviation of the mid-code transition (01…111) to (10…000) from the ideal (i.e. AVCC/2 +1 LSB).

Signal-to-noise ratio (SNR) is the ratio, expressed in dB, of the rms value of the fundamental of input signal to the rms value of the sum of all other spectral components below one-half the sampling frequency, not including harmonics or DC-component.

Signal-to-noise plus distortion (S/N+D or SINAD) is the ratio of the rms value of the fundamental of input signal to the rms value of all of the other spectral components below half the sampling frequency, including harmonics but excluding DC-component.

Spurious free dynamic range (SFDR) is the difference, expressed in dB, between the desired signal amplitude of fundamental to the amplitude of the peak spurious spectral component, where a spurious spectral component is any signal present in the output spectrum that is not present at the input and may or may not be a harmonic.

Total harmonic distortion (THD) is the ratio, expressed in dBc, of the rms total of the first nine harmonic components at the output to the rms level of fundamental of the input signal frequency as seen at the output. THD is calculated as

THD=20log10[sqrt((Af2²+…+Af10²)/Af1²)] where Af1 is the RMS power of the fundamental at the output and Af2 to Af10 are the RMS power in the first nine harmonic frequencies.

Throughput time is the minimum time required between the start of two successive conversions. It is the acquisition time plus the conversion time.

# 9 Package information

To meet environmental requirements, ST offers these devices in different grades of ECOPACK packages, depending on their level of environmental compliance. ECOPACK specifications, grade definitions, and product status are available at: www.st.com. ECOPACK is an ST trademark.

## 9.1 TSSOP-20 package information

**Figure 6. TSSOP-20 Mechanical drawing**

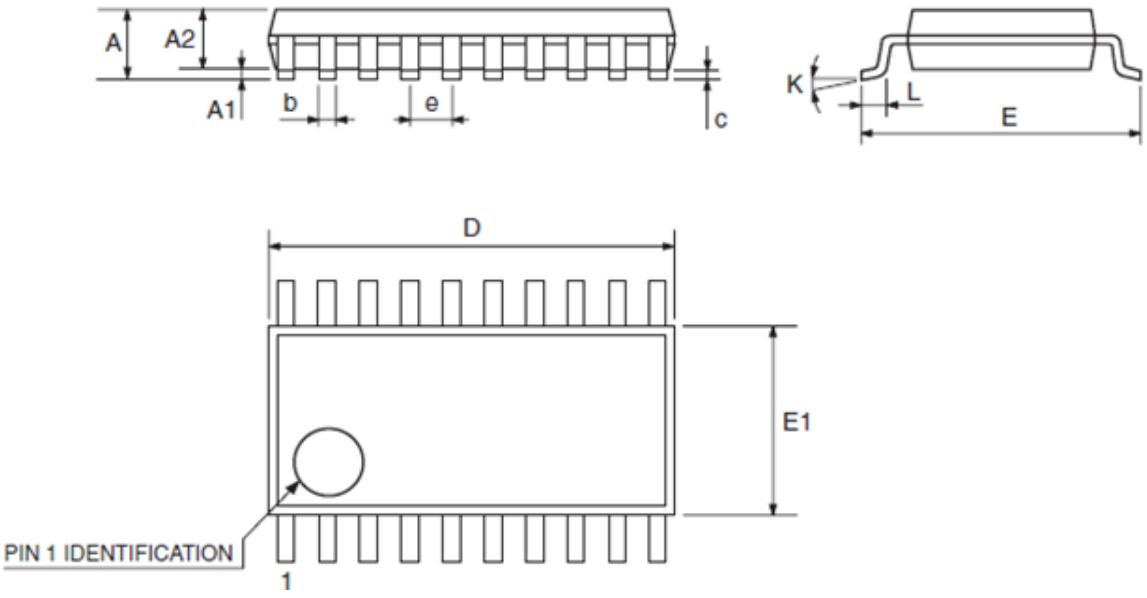


**Table 8. TSSOP-20 package mechanical data**

| Symbol | Milimeters | | | Inches[1] | | |
|---|---|---|---|---|---|---|
| | Min. | Typ. | Max. | Min | Typ | Max |
| A | | | 1.2 | | | 0.047 |
| A1 | 0.05 | | 0.15 | 0.002 | 0.004 | 0.006 |
| A2 | 0.8 | 1 | 1.05 | 0.031 | 0.039 | 0.041 |
| b | 0.19 | | 0.30 | 0.007 | | |
| c | 0.09 | | 0.20 | 0.004 | | |
| D | 6.4 | 6.5 | 6.6 | 0.252 | 0.256 | 0.260 |
| E | 6.2 | 6.4 | 6.6 | 0.244 | 0.252 | 0.260 |
| E1 | 4.3 | 4.4 | 4.48 | 0.169 | 0.173 | 0.176 |
| e | | 0.65 BSC | | | 0.0256 BSC | |
| K | 0° | | 8° | 0° | | 8° |
| L | 0.45 | 0.60 | 0.75 | 0.018 | 0.024 | 0.030 |

1. *Values in inches are converted from mm and rounded to 4 decimal digits.*

*Note: TSSOP: Thin-Shrink Small Outline Package, using golden bonding and Nickel/Palladium/Golden-lead-finishing.*

## 9.2 TSSOP-20 packing information

Figure 7. **TSSOP-20 Carrier tape (dimensions in mm)**

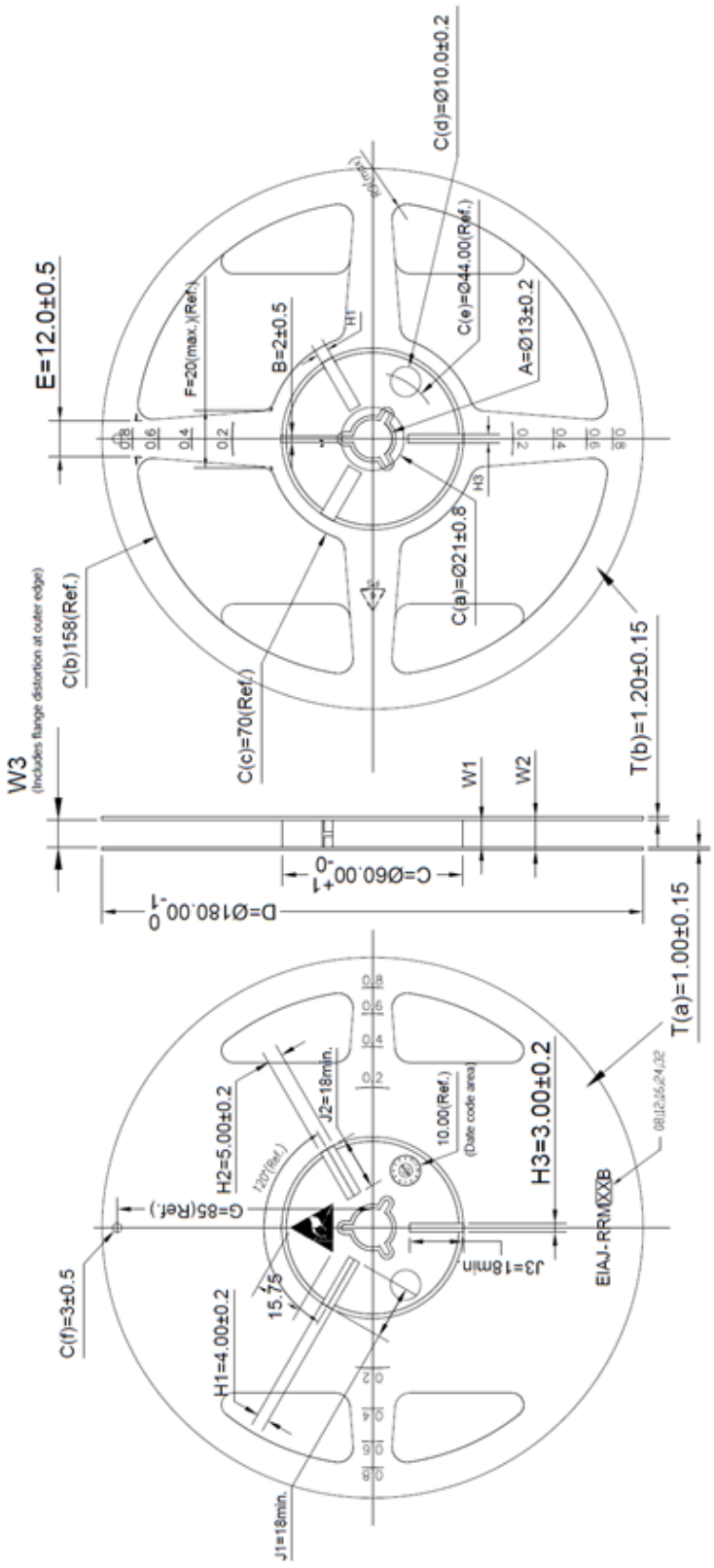

Figure 8. **Tape drawing for TSSOP-20 (dimensions in mm)**

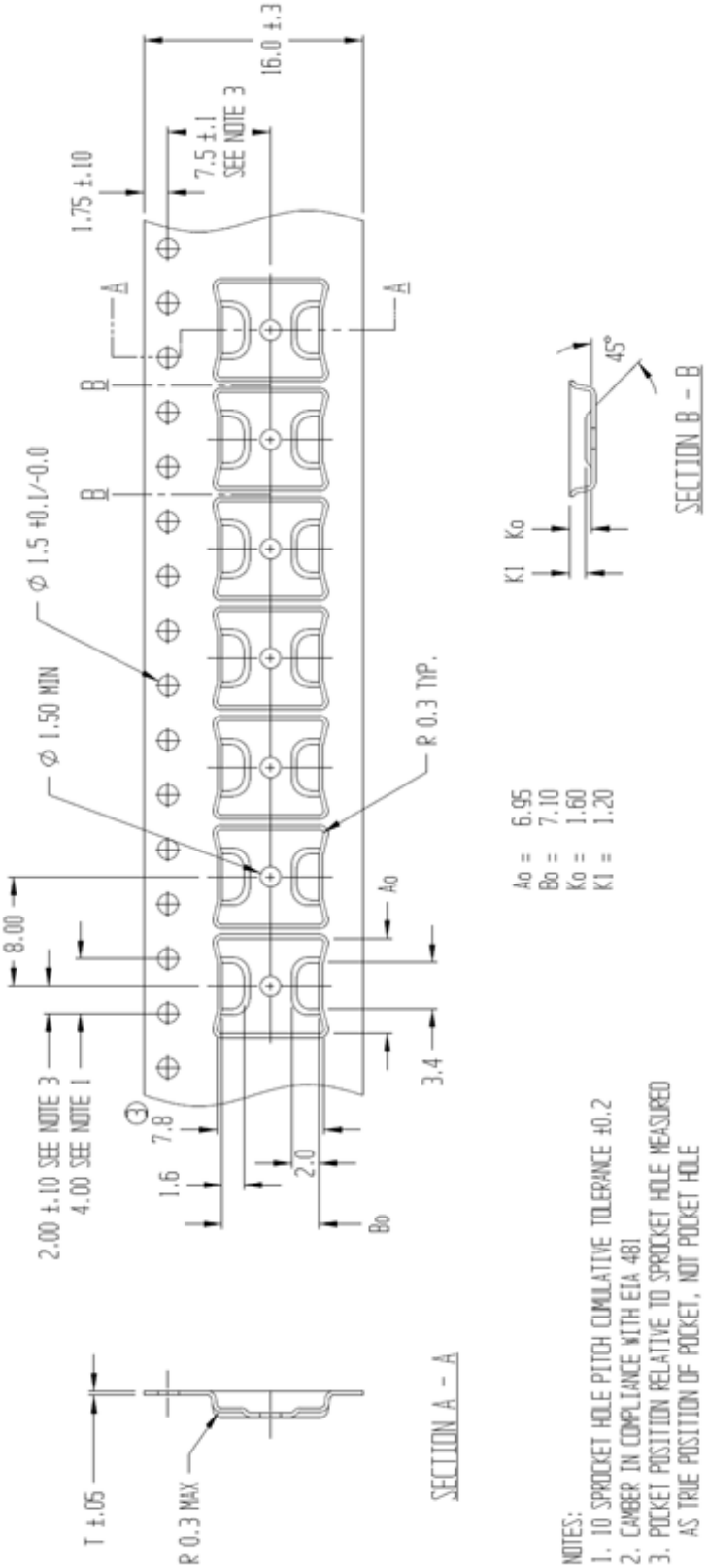

# 10 Ordering information

**Table 9. Ordering information**

| Order code | Quality Level | Package | Lead-finish | Marking | Packing |
|---|---|---|---|---|---|
| LEOAD128PT | Flight model | TSSOP-20 | NiPdAu | LEOAD128 | Tape and reel |

**Table 10. Order code**

| LEO | AD128 | P | T |
|---|---|---|---|
| LEO qualification | Name | TSSOP-20 package | Tape and reel |

**Figure 9. TSSOP-20 marking**

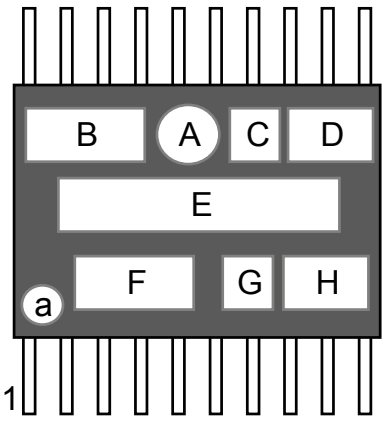


a: pin-1 reference
A : Second Level of interconnexion (type of lead-finishing)
B: ST logo
C: Assy plant
D: Lot code
E: Marking area
F: Country of origin
G: Assy year
H: Assy week

## Revision history

Table 11. **Document revision history**

| Date | Version | Changes |
|---|---|---|
| 01-Mar-2021 | 1 | Initial release. |
| 16-Sep-2021 | 2 | Updated Section 5 Radiations.<br>Removed note and footnote in Table 9. Ordering information. |
| 24-Oct-2024 | 3 | Adjusted timing specifications in Table 6 (typ. values removed). |
| 16-Mar-2026 | 4 | Updated Table 9. |

# Contents

1 Functional description . . . . . 2
2 Maximum ratings and operating conditions . . . . . 4
3 Electrical characteristics . . . . . 5
4 Timing diagrams . . . . . 7
5 Radiations . . . . . 8
6 Outgassing . . . . . 9
7 PCB precautions . . . . . 10
8 Definitions . . . . . 11
9 Package information . . . . . 12
9.1 TSSOP-20 package information . . . . . 12
9.2 TSSOP-20 packing information . . . . . 13
10 Ordering information . . . . . 15
Revision history . . . . . 16

# List of tables

Table 1. Control register bits . . . 3
Table 2. Control register bit description . . . 3
Table 3. Input channel description . . . 3
Table 4. Absolute maximum ratings . . . 4
Table 5. Operating conditions . . . 4
Table 6. Electrical characteristics . . . 5
Table 7. Radiations . . . 8
Table 8. TSSOP-20 package mechanical data . . . 12
Table 9. Ordering information . . . 15
Table 10. Order code . . . 15
Table 11. Document revision history . . . 16

# List of figures

Figure 1. Pin connections (top view) . . . 2
Figure 2. Block diagram . . . 2
Figure 3. Operational timing diagram . . . 7
Figure 4. Serial timing diagram . . . 7
Figure 5. SCLK and /CS timing parameters . . . 7
Figure 6. TSSOP-20 Mechanical drawing . . . 12
Figure 7. TSSOP-20 Carrier tape (dimensions in mm) . . . 13
Figure 8. Tape drawing for TSSOP-20 (dimensions in mm) . . . 14
Figure 9. TSSOP-20 marking . . . 15

**IMPORTANT NOTICE – READ CAREFULLY**

STMicroelectronics NV and its subsidiaries (“ST”) reserve the right to make changes, corrections, enhancements, modifications, and improvements to ST products and/or to this document at any time without notice.

In the event of any conflict between the provisions of this document and the provisions of any contractual arrangement in force between the purchasers and ST, the provisions of such contractual arrangement shall prevail.

The purchasers should obtain the latest relevant information on ST products before placing orders. ST products are sold pursuant to ST’s terms and conditions of sale in place at the time of order acknowledgment.

The purchasers are solely responsible for the choice, selection, and use of ST products and ST assumes no liability for application assistance or the design of the purchasers’ products.

No license, express or implied, to any intellectual property right is granted by ST herein.

Resale of ST products with provisions different from the information set forth herein shall void any warranty granted by ST for such product.

If the purchasers identify an ST product that meets their functional and performance requirements but that is not designated for the purchasers' market segment, the purchasers shall contact ST for more information.

ST and the ST logo are trademarks of ST. For additional information about ST trademarks, refer to www.st.com/trademarks. All other product or service names are the property of their respective owners.

Information in this document supersedes and replaces information previously supplied in any prior versions of this document.

© 2026 STMicroelectronics – All rights reserved