# **SERIES:** EMC-30 | **DESCRIPTION:** AC POWER LINE FILTER

### FEATURES

- 30 dB AC-line noise filtering (150 kHz ~ 1 GHz)
- ensures surge compliance to IEC/EN61000-4-5 standard ±4 kV (2Ω) / ±6 kV (12Ω)
- reduces emissions to help comply with CISPR22 / EN 55022 Class B
- accepts up to 1.5 A (rms) of nominal input current
- wide input voltage range (85~305 Vac)
- wide operating temperature range (-40 to +85 °C)
- options for board-mount, chassis-mount, or DIN-Rail mounting



RoHS

## SPECIFICATIONS

| parameter | conditions/description | min | typ | max | units |
|---|---|---|---|---|---|
| input voltage | | 85 | | 305 | Vac |
| input current | | | | 1.5 | A |
| noise attenuation | at 150 kHz ~ 1 GHz | | 30 | | dB |
| isolation voltage | L/PE, N/PE at 1 minute and leakage current 5 mA max | | 2,000 | | Vac |
| RoHS | yes | | | | |
| operating temperature | | -40 | | 85 | °C |
| storage temperature | | -55 | | 125 | °C |
| storage humidity | non-condensing | | | 95 | % |
| case temperature rise | at 220 Vac, 0.5 A<br>at 220 Vac, 1.0 A<br>at 220 Vac, 1.5 A | | | 5<br>20<br>30 | °C<br>°C<br>°C |

Notes: 1. All specifications are measured at Ta=25°C, humidity < 75%, nominal unless otherwise specified.

## PART NUMBER KEY

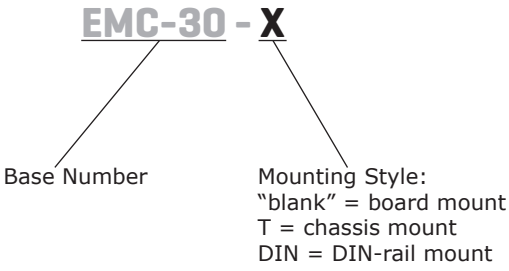




Please read our datasheet & drawing disclaimer here.

## SOLDERABILITY[2]

| parameter | conditions/description | min | typ | max | units |
|---|---|---|---|---|---|
| hand soldering | for 3~5 seconds | 350 | 360 | 370 | °C |
| wave soldering | see wave soldering profile | | | 260 | °C |

Note: 2. For board mount models only.

### *WAVE SOLDERING PROFILE*

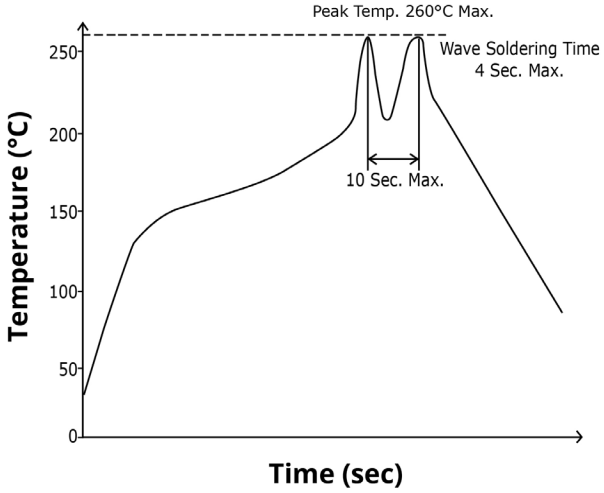


## MECHANICAL

| parameter | conditions/description | min | typ | max | units |
|---|---|---|---|---|---|
| dimensions | board mount: 53.80 x 28.80 x 19.00 [2.118 x 1.134 x 0.748 inch] | | | | mm |
| | chassis mount: 76.00 x 31.50 x 27.80 [2.992 x 1.240 x 1.094 inch] | | | | mm |
| | DIN-Rail mount: 76.00 x 31.50 x 32.40 [2.992 x 1.240 x 1.276 inch] | | | | mm |
| case material | black flame-retardant heat-proof epoxy resin (UL94V-0) | | | | |
| weight | board mount | | 50 | | g |
| | chassis mount | | 70 | | g |
| | DIN-rail mount | | 90 | | g |

## MECHANICAL DRAWING (BOARD MOUNT)

units: mm [inch]
tolerance: ±0.50[±0.020]
pin diameter tolerance: ±0.10[±0.004]

| PIN CONNECTIONS | |
|---|---|
| PIN | Function |
| 1 | GND |
| 2 | IN(N) |
| 3 | IN(L) |
| 4 | OUT(L) |
| 5 | OUT(N) |

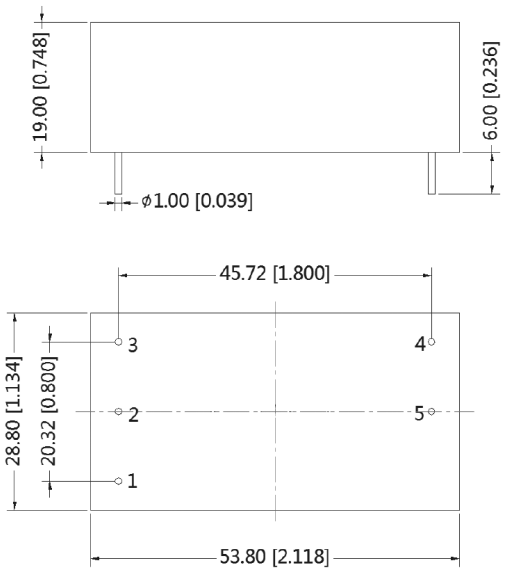


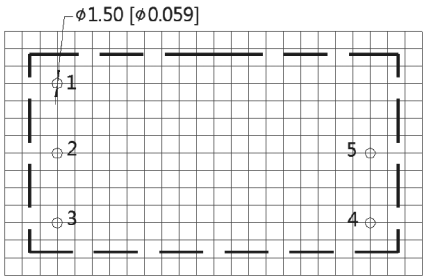


Note : Grid 2.54*2.54mm

Recommended PCB Layout
Top View

## MECHANICAL DRAWING (CHASSIS MOUNT)

units: mm [inch]
tolerance: ±0.50[±0.020]

wire range: 24~12 AWG

| PIN CONNECTIONS | |
|---|---|
| PIN | Function |
| 1 | GND |
| 2 | IN(N) |
| 3 | IN(L) |
| 4 | OUT(L) |
| 5 | OUT(N) |

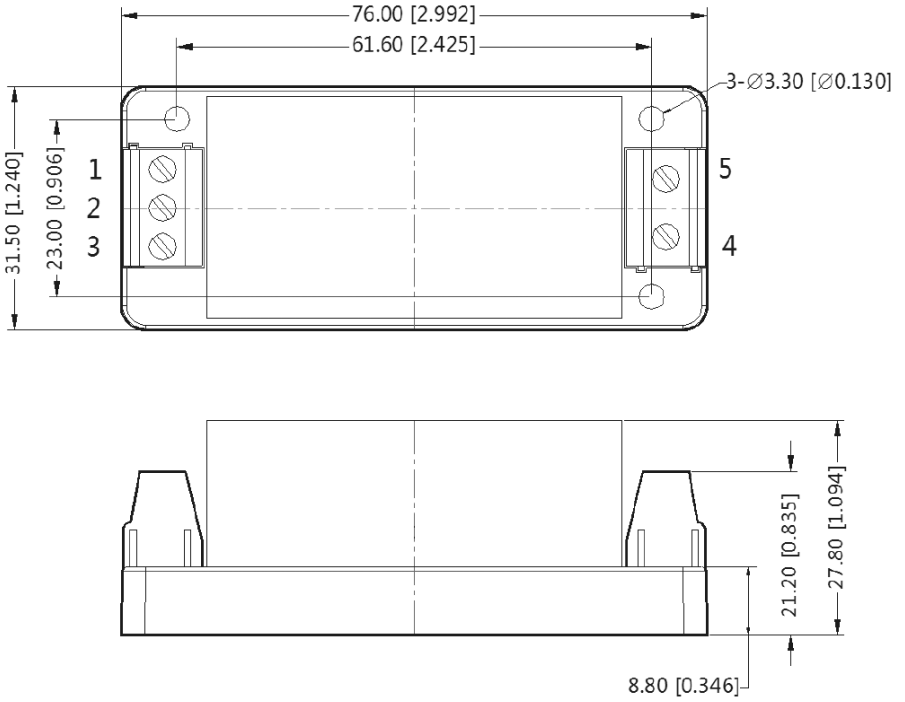


## MECHANICAL DRAWING (DIN-RAIL MOUNT)

units: mm [inch]
tolerance: ±0.50[±0.020]

installed on DIN rail TS35
wire range: 24~12 AWG

| PIN CONNECTIONS | |
|---|---|
| PIN | Function |
| 1 | GND |
| 2 | IN(N) |
| 3 | IN(L) |
| 4 | OUT(L) |
| 5 | OUT(N) |

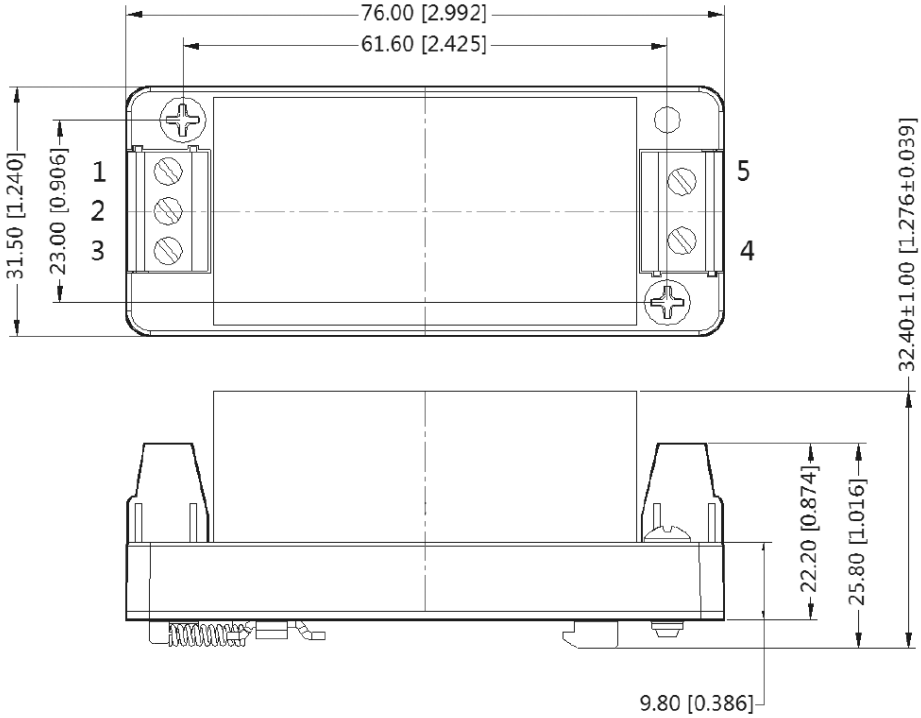

## EMC SPECIFICATIONS

Put the EMC-30 on the input of the AC-DC module to meet surge level IEC/EN 61000-4-5 ±4 kV (2 Ω internal resistance), ±6 kV (12 Ω internal resistance), and help to meet EN 55022 Class B.

Figure 1
Internal Circuit

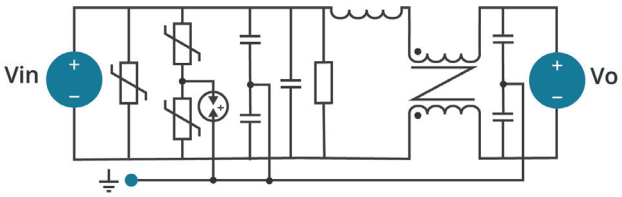


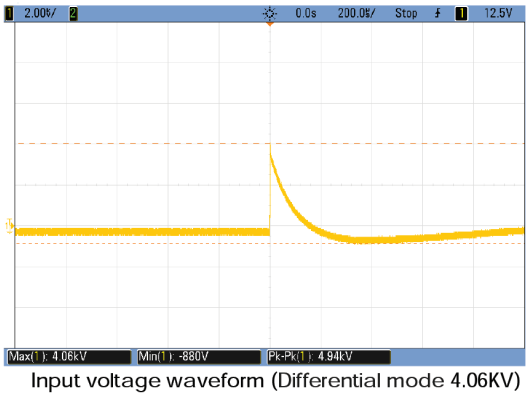


Input voltage waveform (Differential mode 4.06KV)

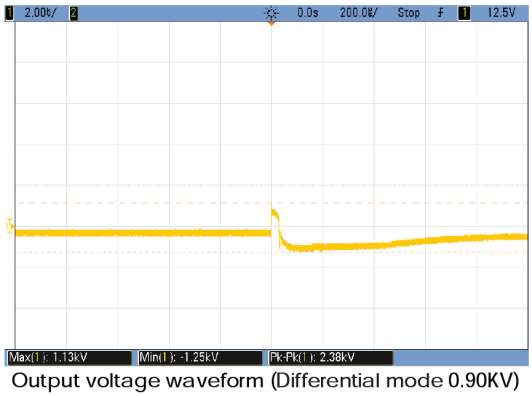


Output voltage waveform (Differential mode 0.90KV)

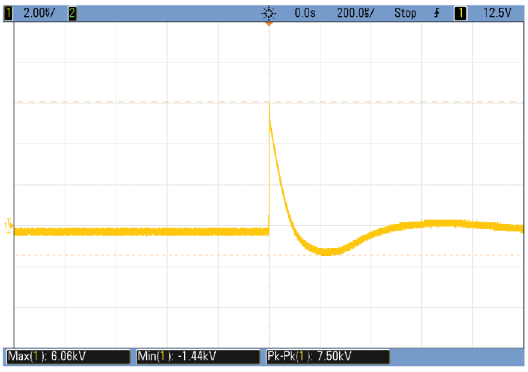


Input voltage waveform (Common mode 6.06KV)

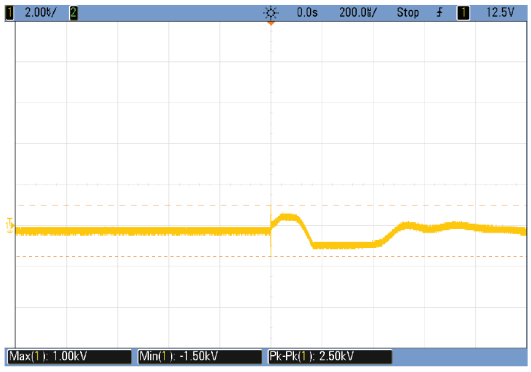


Output voltage waveform(Common mode 1.00KV)

## APPLICATION CIRCUIT

Figure 2
Application Circuit

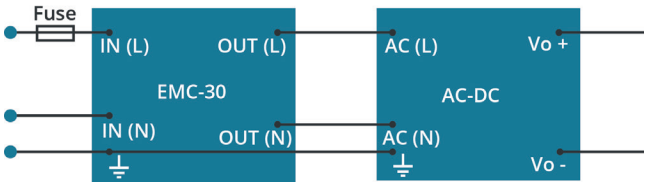

## REVISION HISTORY

| rev. | description | date |
|---|---|---|
| 1.0 | initial release | 10/26/2018 |
| 1.01 | circuit figures updated | 01/12/2022 |

The revision history provided is for informational purposes only and is believed to be accurate.

**Headquarters**
20050 SW 112th Ave.
Tualatin, OR 97062
**800.275.4899**

Fax 503.612.2383
**cui**.com
techsupport@cui.com

CUI offers a two (2) year limited warranty. Complete warranty information is listed on our website.

CUI reserves the right to make changes to the product at any time without notice. Information provided by CUI is believed to be accurate and reliable. However, no responsibility is assumed by CUI for its use, nor for any infringements of patents or other rights of third parties which may result from its use.

CUI products are not authorized or warranted for use as critical components in equipment that requires an extremely high level of reliability. A critical component is any component of a life support device or system whose failure to perform can be reasonably expected to cause the failure of the life support device or system, or to affect its safety or effectiveness.