FOR-1755 Rev.2.2

Transfer or duplication of this document as well as the utilization or communication of its contents are prohibited unless explicit authorization is granted. Violations will be liable for compensation. All rights reserved for patent, utility model or designs registrations. 除非给予明确授权，否则禁止转让、复制、利用、交流本文件的内容。侵犯者将负赔偿责任。本公司保留对涉及发明、实用新型和外观专利的所有权利。

please refer to the 3D model，for those unmarked dimensions

未注公差/General tolerances(mm)

0 ~ 3	>3 ~ 6	>6 ~ 10	>10 ~ 18	>18 ~ 30	>30 ~ 50	>50 ~ 80	>80 ~ 120	>120 ~ 180	>180 ~ 250	>250 ~ 315	>315 ~ 400	>400 ~ 500	>500
±0.12	±0.18	±0.22	±0.26	±0.31	±0.37	±0.57	±0.80	±0.93	±1.05	±1.15	±1.60	±2.20	±2.50

0.1/10

±2°

使用温度范围/ Operating temperature(℃)	- 40~+105
符合 RoHS环保要求/ Conform to RoHS	Yes
阻燃等级/ Flame class	UL94V- 0

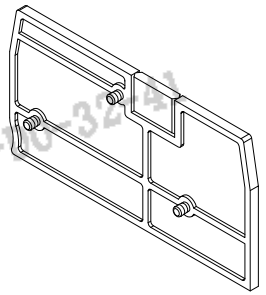

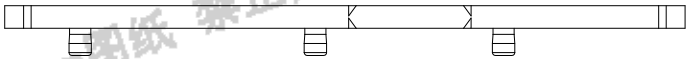

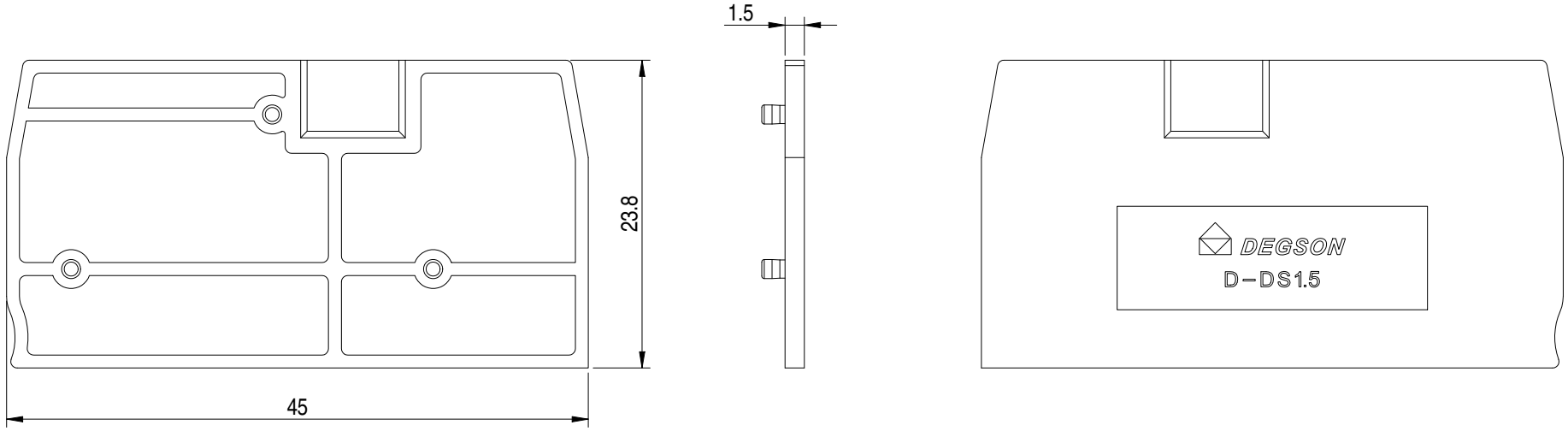

Degson图纸 禁止外传 2025/07/01 18-C0-4D-D0-32-41

00		NEW DARWING	宗明忠	2025.07.01
REV	ECN	DESCRIPTION	DRFT	DATE

DEGSON

APPD:	李根劳	2025.07.01
CHKD:	马恩开	2025.07.01
DRFT:	宗明忠	2025.07.01

A4 mm (inch)

MATERIAL: PA66

SURFACE/COLOR:

MAT NO./REV: 11060001533-1 / 00

MAT STATUS: work

NAME: D-DS1.5-01P-11-00L(H)

DRAWING NO.	TYPE	DRAWING STATUS	SCALE	SHEET
200364122	CUSTOMER DRAWING	work	2:1	1/1