Pushing Performance
Since 1945

Han hinged frame plus, for 6 modules A-F

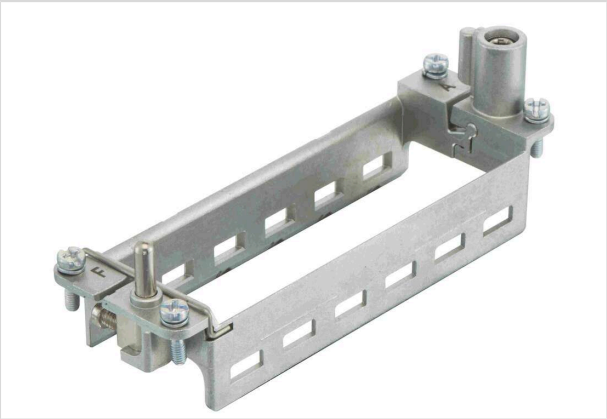

Image is for illustration purposes only. Please refer to product description.

Part number	09 14 024 0361
Specification	Han hinged frame plus, for 6 modules A-F
HARTING eCatalogue	https://harting.com/09140240361

Identification

Category	Accessories
Series	Han-Modular®
Type of accessory	Hinged frame plus
Description of the accessory	for 6 modules A ... F

Version

Size	24 B

Technical characteristics

Conductor cross-section (mm²)	1 ... 10 mm² PE (power side) 0.5 ... 2.5 mm² PE (signal side) The use of ferrules is recommended, conductor cross-section 10 mm² only with ferrule crimping tool 09 99 000 0374.
Stripping length	8 ... 10 mm
Tightening torque	0.8 Nm PE screw M3 1.2 Nm PE screw M4
Recommended screw driver	Slotted 0.6 x 3.5 PH2
Limiting temperature	-40 ... +125 °C
Mating cycles	≥500

Material properties

Material	Zinc die-cast Stainless steel
RoHS	compliant with exemption

HARTING Electric Stiftung & Co. KG | Wilhelm-Harting-Straße 1 | 32339 Espelkamp | Germany
Phone +49 5772 47-97100 | electric@HARTING.com | www.HARTING.com

Pushing Performance
Since 1945

Material properties

RoHS exemptions	6(c): Copper alloy containing up to 4 % lead by weight
ELV status	compliant with exemption
China RoHS	50
REACH Annex XVII substances	Not contained
REACH ANNEX XIV substances	Not contained
REACH SVHC substances	Yes
REACH SVHC substances	Lead
PFAS	No
ECHA SCIP number	564b7d75-7bf6-4cfb-acb1-2168eb61b675
California Proposition 65 substances	Yes
California Proposition 65 substances	Lead

Specifications and approvals

Specifications	IEC 60664-1 IEC 61984 IEC 61373 Category 2
UL / CSA	UL 1977 ECBT2.E235076
Approvals	DNV GL

Commercial data

Packaging size	1
Net weight	8.05 g
Country of origin	Germany
European customs tariff number	85389099
GTIN	5713140161801
eCl@ss	27440206 Module carrier frame for industrial connectors
ETIM	EC002312
UNSPSC 24.0	39121421

HARTING Electric Stiftung & Co. KG | Wilhelm-Harting-Straße 1 | 32339 Espelkamp | Germany
Phone +49 5772 47-97100 | electric@HARTING.com | www.HARTING.com