Transfer or duplication of this document as well as the utilization or communication of its contents are prohibited unless explicit authorization is granted. Violations will be liable for compensation. All rights reserved for patent.
utility model or designs registrations. 除非经子明确授权，否则禁止拷让、复制、利用、交流本文件的内容，侵犯者将负赔偿责任。本公司保留对涉及实用、实用新型和外观专利的所有权利。



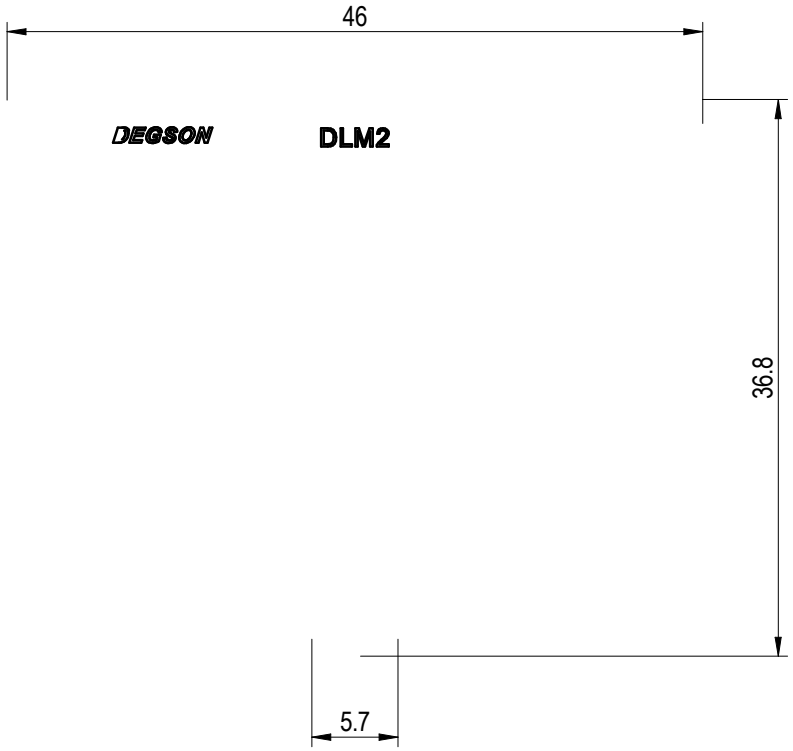

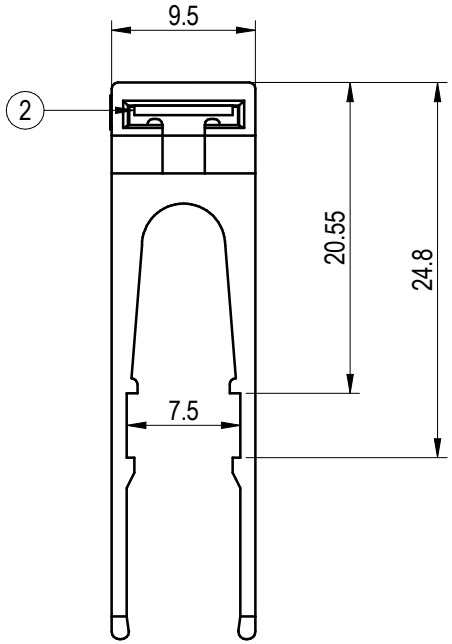

REV	ECN	DESCRIPTION	DRFT	DATE
00		NEW DRAWING	王乐洋	2025.02.10

DEGSON

APPD:	李根劳	2025.02.10
CHKD:	马恩开	2025.02.10
DRFT:	王乐洋	2025.02.10

A4 mm (inch)

MATERIAL:	SURFACE/COLOR:
MAT NO./REV: 11060001535-1 / 00	MAT STATUS: work
NAME: DLM2-01P-11-00L(H)	

DRAWING NO.	TYPE	DRAWING STATUS	SCALE	SHEET
200331829	CUSTOMER DRAWING	work	2:1	1/1