GNSS L1/L2/L5/L6 SMD Dual-SAW Filter



AFII-SW-0094-Q

Request Samples | Check Inventory

1.5 x 1.1 x 0.38 mm
RoHS Compliant
MSL Level = 1

Description

This AEC-Q200 compliant Dual-SAW filter delivers comprehensive multi-band GNSS coverage for next-generation positioning systems. Supporting L1 alongside combined L2/L5/L6 bands in an ultra-compact 1.5 x 1.1 x 0.38 mm package, it features low insertion loss of 1.5 dB (L1) and 2.3 dB (L2/L5/L6) with out-of-band rejection exceeding 21 dB. Rated for high-power +25 dBm operation across -40 to +105 °C, this RoHS-compliant MSL Level 1 component enables centimeter-level accuracy for automotive telematics, RTK systems, autonomous vehicles, and precision agriculture where robust multi-frequency performance in harsh environments is essential.

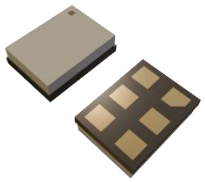

Features

- AEC-Q200 GNSS L1/L2/L5/L6 Dual-SAW Filter
- Compact Size: 1.5 x 1.1 x 0.38 mm
- Insertion Loss: 1.5 dB (L1) / 2.3 dB (L2/L5/L6)
- Out-of-Band Rejection: > 21 dB
- Maximum Input Power: +25 dBm
- Extended Temperature -40 to +105 °C
- Maximum DC Voltage: 5 V
- RoHS Compliant | MSL Level 1

Applications

- High-Precision GNSS Modules
- RTK Systems
- Automotive Transportation & Telematics
- Asset Tracking / Fleet Management
- UAVs, Robotics & Autonomous Vehicles
- Micro-Mobility Solutions
- Precision Agriculture

Ordering Information

Part Number	Description
AFII-SW-0094-Q	GNSS L1/L2/L5/L6 SMD Dual-SAW Filter on Cut Tape
AFII-SW-0094-Q-T	GNSS L1/L2/L5/L6 SMD Dual-SAW Filter on Tape & Reel

Note: Other options not listed may be available upon request via Abracon online support

ABRACON

12117 Bee Caves Rd, Bldg-3, Suite 200 Bee Cave, TX 78738
Phone: 512-371-6159 | Fax: 512-351-8858
For terms and conditions of sales, please visit:
www.abracon.com

REVISED: 09-17-26

ABRACON IS ISO9001-2015 CERTIFIED

GNSS L1/L2/L5/L6 SMD Dual-SAW Filter

AFII-SW-0094-Q

Request Samples | Check Inventory

1.5 x 1.1 x 0.38 mm
RoHS Compliant
MSL Level = 1

GNSS Frequency Bands Covered				
GPS	L1 1575.42MHz	L2 1227.6MHz	L5 1176.45MHz	
	■	■	■	
GLONASS	G1 1598.06-1609.31MHz	G2 1242.93-1251.68MHz	G3 1202.025MHz	
	■	■	■	
Galileo	E1 1575.42MHz	E5a 1176.45MHz	E5b 1201.5MHz	E6 1278.75MHz
	■	■	■	■
BeiDou	B1 1561MHz	B2 1207.14MHz	B3 1268.52MHz	
	■	■	■	
QZSS	L1 1575.42MHz	L2 1227.6MHz	L5 1176.45MHz	L6 1278.75MHz
	■	■	■	■
IRNSS/NAVIC			L5 1176.45MHz	
			■	
SBAS	L1/E1/B1 1575.42MHz		L5/B2a/E5a 1176.45MHz	
	■		■	

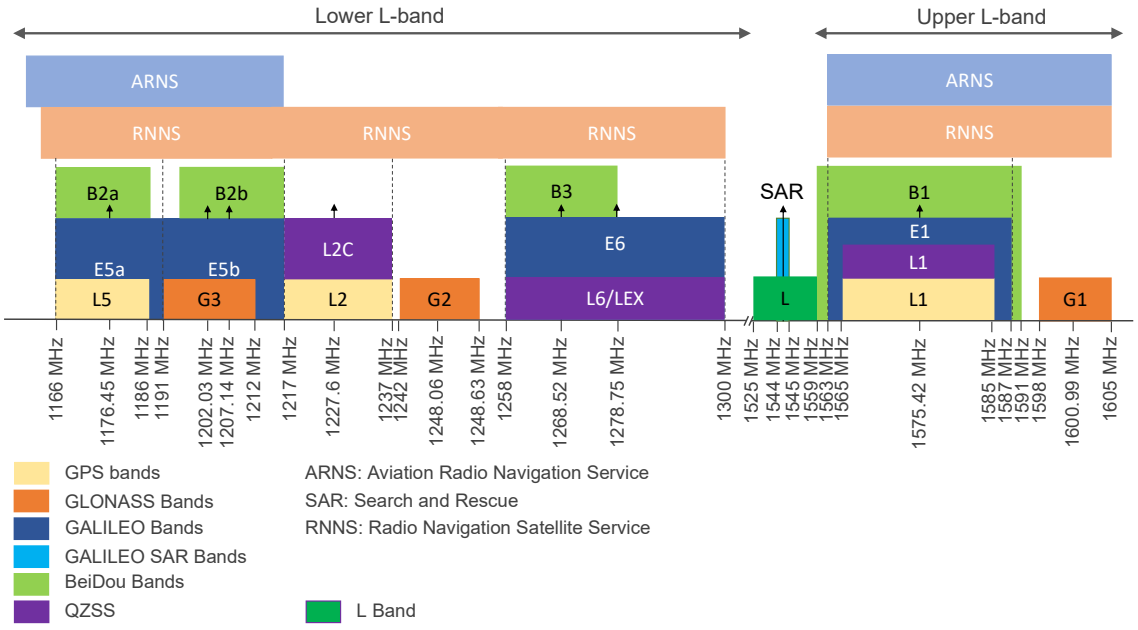

Frequency allocation: GNSS systems, upper L bands and lower L bands

ABRACON

12117 Bee Caves Rd, Bldg-3, Suite 200 Bee Cave, TX 78738
Phone: 512-371-6159 | Fax: 512-351-8858
For terms and conditions of sales, please visit:
www.abracon.com

REVISED: 09-17-26

ABRACON IS ISO9001-2015 CERTIFIED

GNSS L1/L2/L5/L6 SMD Dual-SAW Filter



AFII-SW-0094-Q

Request Samples | Check Inventory

1.5 x 1.1 x 0.38 mm
RoHS Compliant
MSL Level = 1

Electrical Specification

Parameters	Minimum	Typical	Maximum	Units	Notes
Frequency	1525	-	1610.485	MHz	
VSWR (1)	-	1.5	2.0	:1	1525 ~ 1610.485 MHz
Insertion Loss (1) (L)	-	1.9	2.2	dB	1525 ~ 1559 MHz
Insertion Loss (1) (B1)	-	1.4	2.1		1559.052 ~1563.144 MHz
Insertion Loss (1) (L1)	-	1.5	2.0		1565.19 ~ 1585.65 MHz
Insertion Loss (1) (G1)	-	1.7	2.2		1592.953 ~1610.485 MHz
Amplitude Ripple (1)	-	0.6	2.0	dB	1525 ~ 1610.485 MHz
Group Delay Ripple (1) (L)	-	1.5	3.0	ns	1525 ~ 1559 MHz
Group Delay Ripple (1) (B1)	-	0.05	0.1		1559.052 ~1563.144MHz
Group Delay Ripple (1) (L1)	-	0.07	0.15		1565.19 ~ 1585.65MHz
Group Delay Ripple (1) (G1)	-	0.5	1.2		1592.953 ~1610.485MHz
Attenuation (1) (Reference level from 0 dB)	30	42	-	dB	100 ~ 885 MHz
	25	34	-		885 ~ 1100 MHz
	15	28	-		1100 ~ 1125 MHz
	27	28	-		1325 ~ 1462.9 MHz
	15	21	-		1660 ~ 1680 MHz
	20	29	-		1680 ~ 2400 MHz
	23	27	-		2400 ~ 2700 MHz
	25	27	-		2700 ~ 3300 MHz
	24	25	-		3300 ~ 4200 MHz
	23	24	-		4200 ~ 5000 MHz
	20	22	-		5000 ~ 5925 MHz
	15	21	-		5925 ~ 7125 MHz
Source Impedance (2) (single ended)	-	50	-	Ω	-
Load Impedance (2) (single ended)	-	50	-	Ω	-
Maximum DC Voltage at Input & Output	5			V	-
Frequency Temperature Coefficient	-24			ppm / K	-
Maximum Input Power	25			dBm	-

Notes: (1) Averaged values of linear S-Parameters at +25ºC
(2) A matching network is necessary (refer to the Measurement Circuits section)

ABRACON

12117 Bee Caves Rd, Bldg-3, Suite 200 Bee Cave, TX 78738
Phone: 512-371-6159 | Fax: 512-351-8858
For terms and conditions of sales, please visit:
www.abracon.com

REVISED: 09-17-26

ABRACON IS ISO9001-2015 CERTIFIED

GNSS L1/L2/L5/L6 SMD Dual-SAW Filter

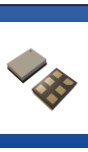

AFII-SW-0094-Q

Request Samples | Check Inventory

1.5 x 1.1 x 0.38 mm
RoHS Compliant
MSL Level = 1

Parameters	Minimum	Typical	Maximum	Units	Notes
Frequency	1164.45	-	1299	MHz	
VSWR (1)	-	1.9	2.0	:1	1164.45 ~ 1299 MHz
Insertion Loss (1) (L5)	-	2.3	2.6	dB	1164.45 ~ 1188.45 MHz
Insertion Loss (1) (B2b/E5b)	-	1.7	2.0		1196.91 ~ 1217.37 MHz
Insertion Loss (1) (L2)	-	1.7	2.0		1217.37 ~ 1237.83 MHz
Insertion Loss (1) (L6)	-	2.3	2.6		1237.83 ~ 1299 MHz
Amplitude Ripple (1)	-	0.7	2.0	dB	11164 ~ 1299 MHz
Group Delay Ripple (1) (L5)	-	3.5	8.6	ns	1164.45 ~ 1188.45 MHz
Group Delay Ripple (1) (B2b/E5b)	-	0.5	1.0		1196.91 ~ 1217.37 MHz
Group Delay Ripple (1) (L2)	-	0.2	0.5		1217.37 ~ 1237.83 MHz
Group Delay Ripple (1) (L6)	-	3.6	16.4		1237.83 ~ 1299 MHz
Attenuation (1) (Reference level from 0 dB)	30	42	-	dB	100 ~ 885 MHz
	25	34	-		885 ~ 1100 MHz
	15	28	-		1100 ~ 1125 MHz
	27	28	-		1325 ~ 1462.9 MHz
	15	21	-		1660 ~ 1680 MHz
	20	29	-		1680 ~ 2400 MHz
	23	27	-		2400 ~ 2700 MHz
	25	27	-		2700 ~ 3300 MHz
	24	25	-		3300 ~ 4200 MHz
	23	24	-		4200 ~ 5000 MHz
	20	22	-		5000 ~ 5925 MHz
	15	21	-		5925 ~ 7125 MHz
Source Impedance (2) (single ended)	-	50	-	Ω	-
Load Impedance (2) (single ended)	-	50	-	Ω	-
Maximum DC Voltage at Input & Output	5			V	-
Frequency Temperature Coefficient	-19			ppm / K	-
Maximum Input Power	25			dBm	-

Notes: (1) Averaged values of linear S-Parameters at +25ºC
(2) A matching network is necessary (refer to the Measurement Circuits section)

ABRACON

12117 Bee Caves Rd, Bldg-3, Suite 200 Bee Cave, TX 78738
Phone: 512-371-6159 | Fax: 512-351-8858
For terms and conditions of sales, please visit:
www.abracon.com

REVISED: 09-17-26

ABRACON IS ISO9001-2015 CERTIFIED

GNSS L1/L2/L5/L6 SMD Dual-SAW Filter



AFII-SW-0094-Q

Request Samples | Check Inventory

1.5 x 1.1 x 0.38 mm
RoHS Compliant
MSL Level = 1

Mechanical Specification

Parameters	Specifications
Filter Dimension	1.5 x 1.1 x 0.38 mm
Mounting Type	Surface Mount
Additional Resources	Download STEP File, Package Drawing, 3D PDF

Environmental Specification

Parameters	Specifications
Operating Temperature Range	-40ºC ~ +105ºC
Storage Temperature Range	-40ºC ~ +105ºC
ESD Voltage (HBM)	＞100 V
ESD Voltage (MM)	＞50 V
Moisture Sensitivity Level	1
RoHS Compliant	Yes

ABRACON

12117 Bee Caves Rd, Bldg-3, Suite 200 Bee Cave, TX 78738
Phone: 512-371-6159 | Fax: 512-351-8858
For terms and conditions of sales, please visit:
www.abracon.com

REVISED: 09-17-26

ABRACON IS ISO9001-2015 CERTIFIED

GNSS L1/L2/L5/L6 SMD Dual-SAW Filter



AFII-SW-0094-Q

Request Samples | Check Inventory

1.5 x 1.1 x 0.38 mm
RoHS Compliant
MSL Level = 1

Product Dimensions

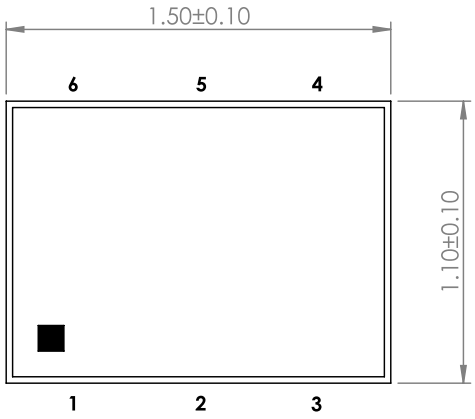

TOP VIEW

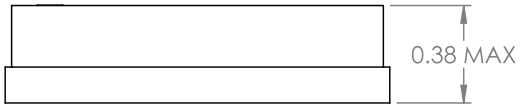

FRONT VIEW

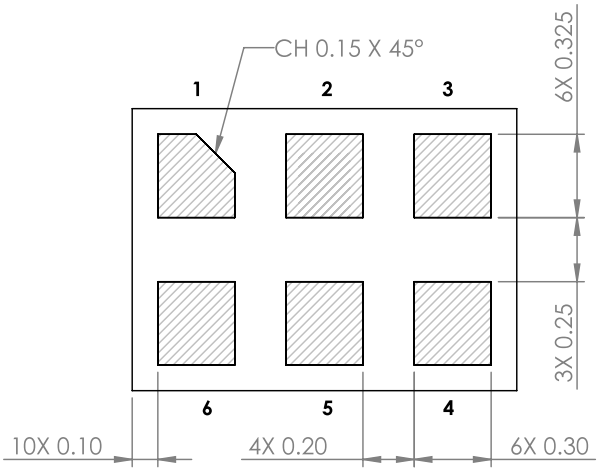

BOTTOM VIEW

RECOMMENDED LAND PATTERN

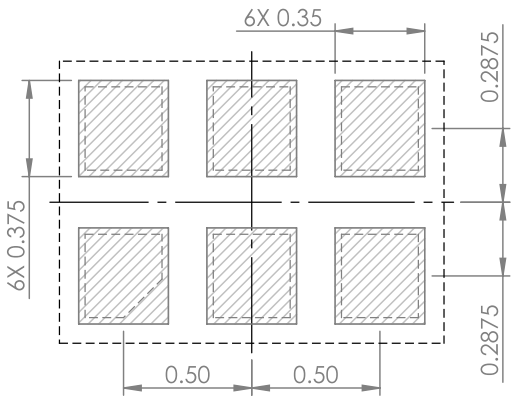

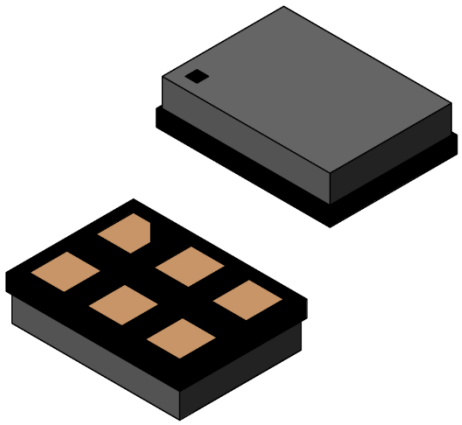

Unit : mm

Pin No.	Description
2	Common Input
5	Common Output
1, 3, 4, 6	Ground

ABRACON

12117 Bee Caves Rd, Bldg-3, Suite 200 Bee Cave, TX 78738
Phone: 512-371-6159 | Fax: 512-351-8858
For terms and conditions of sales, please visit:
www.abracon.com

REVISED: 09-17-26

ABRACON IS ISO9001-2015 CERTIFIED

GNSS L1/L2/L5/L6 SMD Dual-SAW Filter

AFII-SW-0094-Q

Request Samples | Check Inventory

1.5 x 1.1 x 0.38 mm
RoHS Compliant
MSL Level = 1

Measurement Circuit

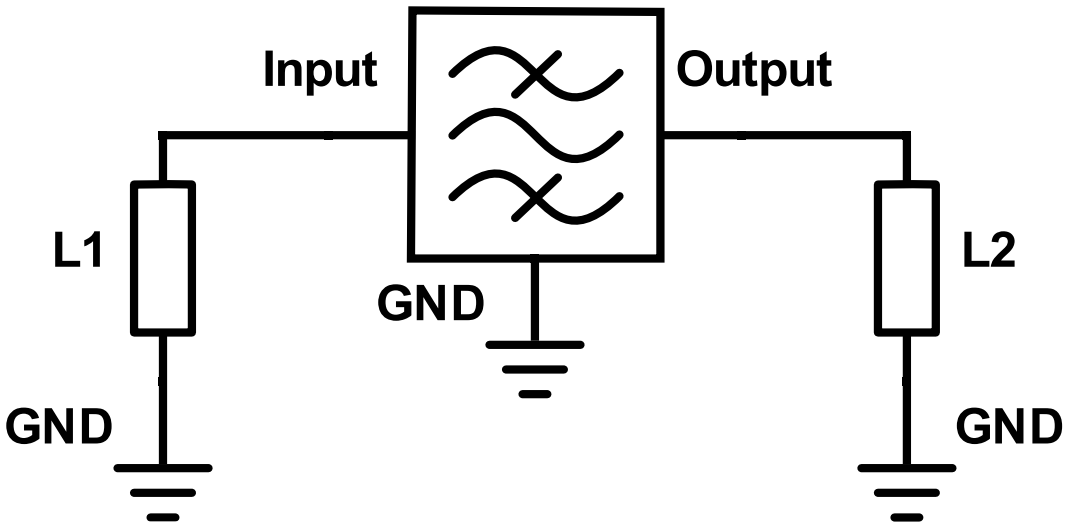

Port	Matching Component	Manufacture	Part Number
Input (Pin 2)	L1: 3.6 nH	Abracon	ATFC-0402-3N6B-T
Output (Pin 5)	L2: 3.0 nH	Abracon	ATFC-0402-3N0B-T

ABRACON

12117 Bee Caves Rd, Bldg-3, Suite 200 Bee Cave, TX 78738
Phone: 512-371-6159 | Fax: 512-351-8858
For terms and conditions of sales, please visit:
www.abracon.com

REVISED: 09-17-26

ABRACON IS ISO9001-2015 CERTIFIED

GNSS L1/L2/L5/L6 SMD Dual-SAW Filter

AFII-SW-0094-Q

Request Samples | Check Inventory

1.5 x 1.1 x 0.38 mm
RoHS Compliant
MSL Level = 1

Frequency Characteristics

S21 narrow band

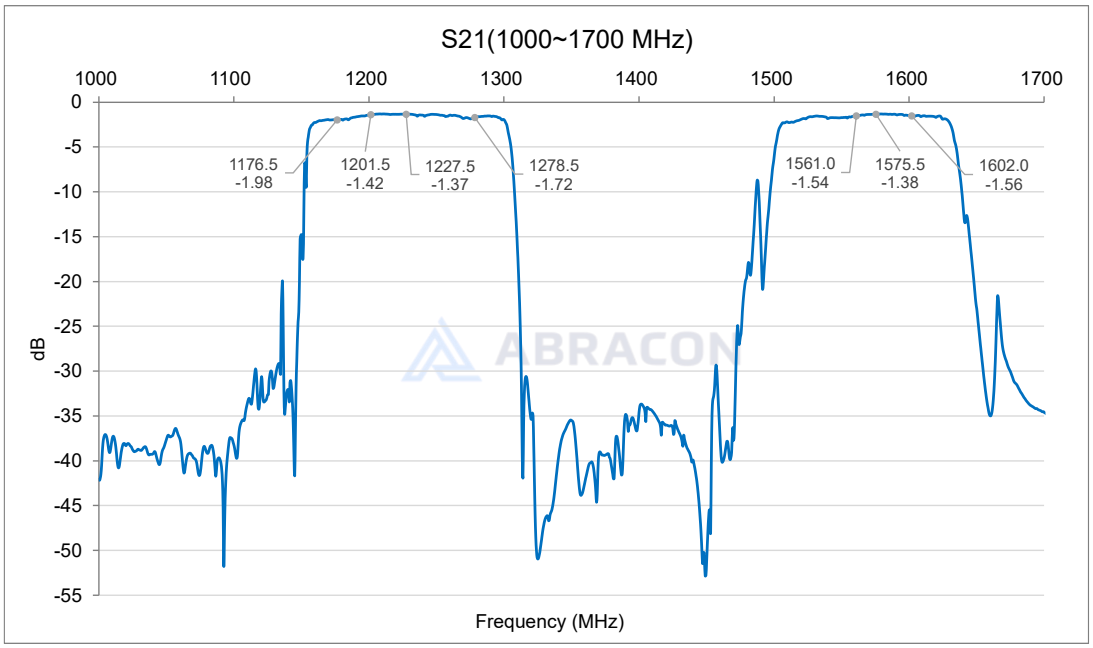

S21 wide band

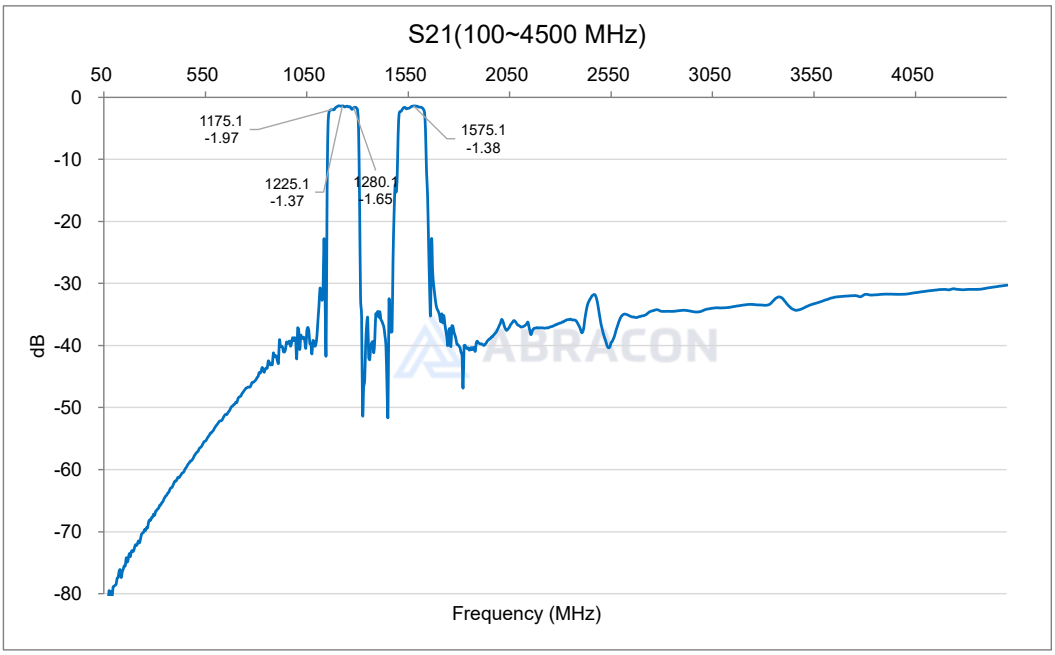

ABRACON

12117 Bee Caves Rd, Bldg-3, Suite 200 Bee Cave, TX 78738
Phone: 512-371-6159 | Fax: 512-351-8858
For terms and conditions of sales, please visit:
www.abracon.com

REVISED: 09-17-26

ABRACON IS ISO9001-2015 CERTIFIED

GNSS L1/L2/L5/L6 SMD Dual-SAW Filter

AFII-SW-0094-Q

Request Samples | Check Inventory

1.5 x 1.1 x 0.38 mm
RoHS Compliant
MSL Level = 1

VSWR (S11 & S22)

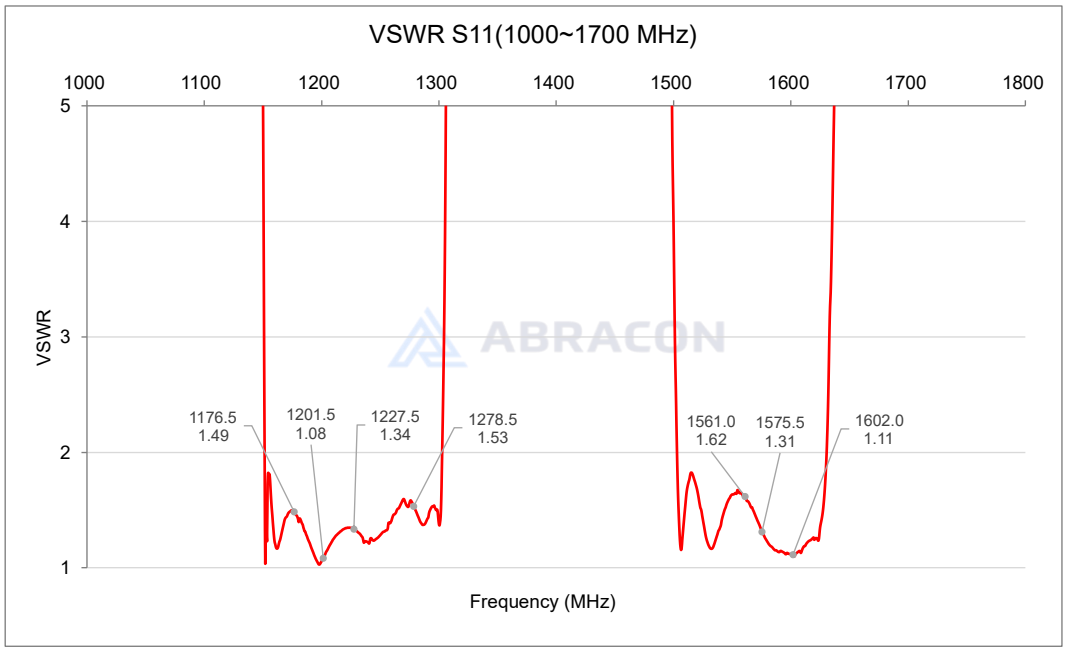

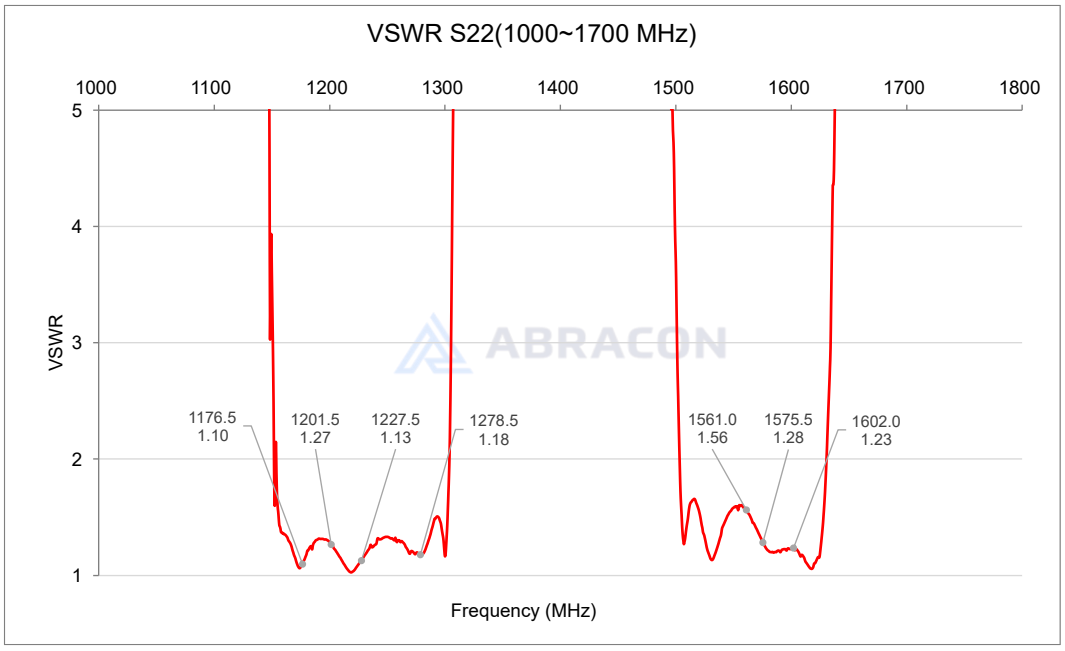

ABRACON

12117 Bee Caves Rd, Bldg-3, Suite 200 Bee Cave, TX 78738
Phone: 512-371-6159 | Fax: 512-351-8858
For terms and conditions of sales, please visit:
www.abracon.com

REVISED: 09-17-26

ABRACON IS ISO9001-2015 CERTIFIED

GNSS L1/L2/L5/L6 SMD Dual-SAW Filter



AFII-SW-0094-Q

Request Samples

Check Inventory

1.5 x 1.1 x 0.38 mm
RoHS Compliant
MSL Level = 1

Group Delay

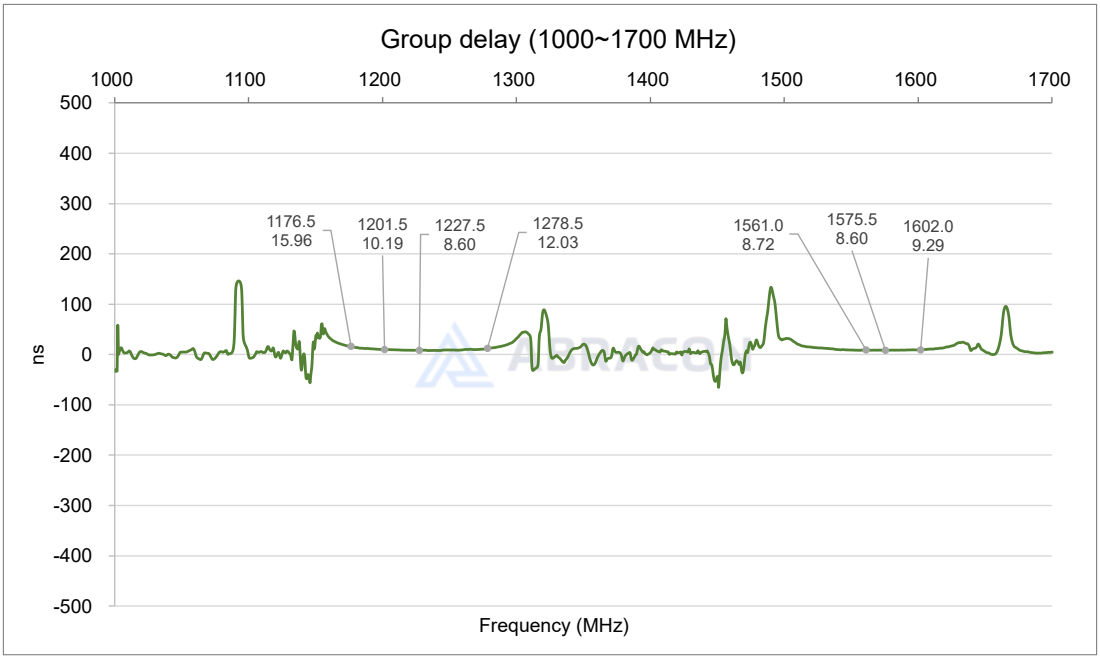

ABRACON

12117 Bee Caves Rd, Bldg-3, Suite 200 Bee Cave, TX 78738
Phone: 512-371-6159 | Fax: 512-351-8858
For terms and conditions of sales, please visit:
www.abracon.com

REVISED: 09-17-26

ABRACON IS ISO9001-2015 CERTIFIED

GNSS L1/L2/L5/L6 SMD Dual-SAW Filter

AFII-SW-0094-Q

Request Samples | Check Inventory

1.5 x 1.1 x 0.38 mm
RoHS Compliant
MSL Level = 1

Smith Chart (S11 & S22)

Smith chart S11 (1166~1606MHz)

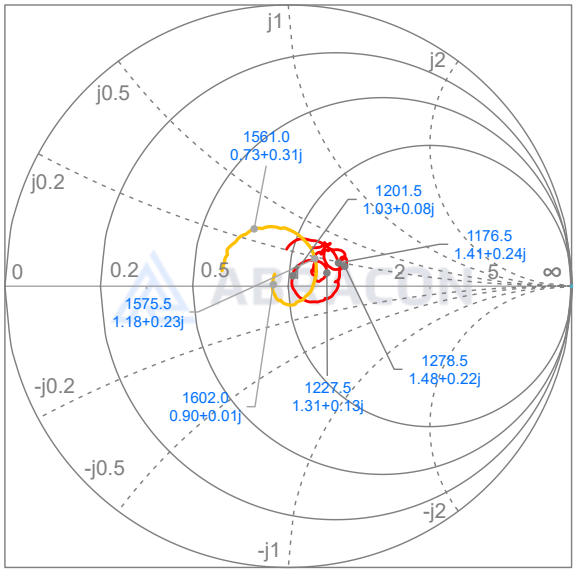

Smith chart S22 (1166~1606MHz)

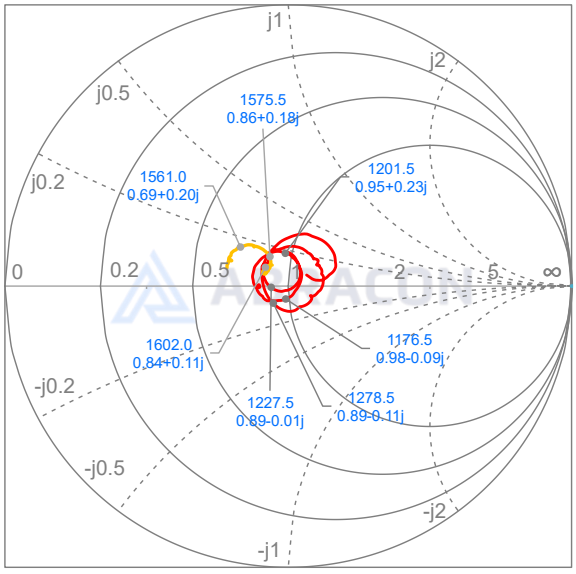

ABRACON

12117 Bee Caves Rd, Bldg-3, Suite 200 Bee Cave, TX 78738
Phone: 512-371-6159 | Fax: 512-351-8858
For terms and conditions of sales, please visit:
www.abracon.com

REVISED: 09-17-26

ABRACON IS ISO9001-2015 CERTIFIED

GNSS L1/L2/L5/L6 SMD Dual-SAW Filter



AFII-SW-0094-Q

Request Samples | Check Inventory

1.5 x 1.1 x 0.38 mm
RoHS Compliant
MSL Level = 1

Reflow Profile [JEDEC J-STD-020]

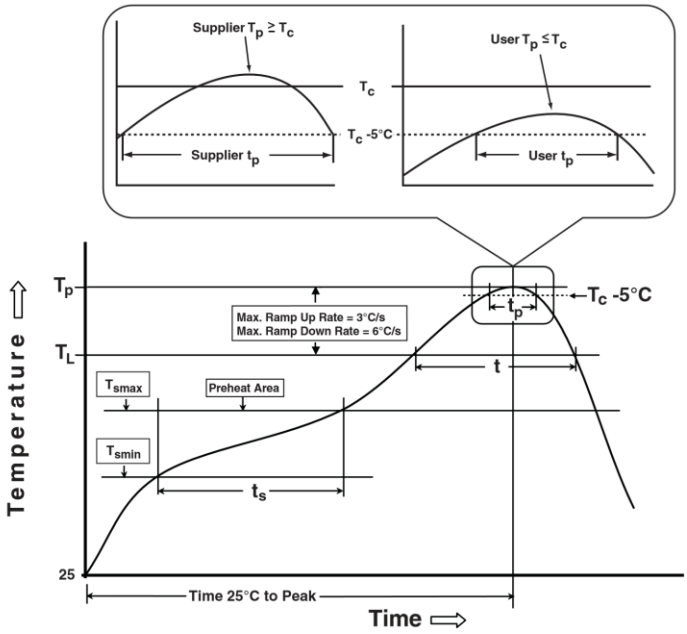

Table 1

SnPb Eutectic Process Classification Temperatures (T_c)		
Package Thickness	**Volume mm³ <350**	**Volume mm³ ≧350**
<2.5mm	235°C	220°C
≧2.5mm	220°C	220°C

Table 2

Pb-Free Process Classification Temperatures (T_c)			
Package Thickness	**Volume mm³ <350**	**Volume mm³ 350-2000**	**Volume mm³ >2000**
<1.6mm	260°C	260°C	260°C
1.6mm - 2.5mm	260°C	250°C	245°C
>2.5mm	250°C	245°C	245°C

Profile Feature	Sn-Pb Eutectic Assembly	Pb-Free Assembly
Preheat / soak		
Temperature minimum (T_{smin})	100°C	150°C
Temperature maximum (T_{smax})	150°C	180°C
Time (T_{smin} to T_{smax}) (t_s)	60 – 120 sec.	60 – 90 sec.
Average ramp-up rate (T_{smax} to T_p)	3°C/sec. max	3°C/sec. max
Liquidous temperature (T_L)	183°C	220°C
Time at Liquidous (T_L)	60 – 150 sec.	50 – 80 sec.
Peak package body temperature (T_p)*	**See Table 1**	**See Table 2**
Time (T_p)** within 5°C of the specified classification temperature (T_c)	20 sec.	20 ~ 40 sec.
Ramp-down rate (T_p to T_{smax})	6°C/sec. max	6°C/sec. max
Time 25°C to peak temperature	6 min. max	8 min. max
Reflow cycles	2 max	2 max

*Tolerance for peak profile temperature (T_p) is defined as a supplier minimum and a user maximum.
**Tolerance for time at peak profile temperature (t_p) is defined as a supplier minimum and a user maximum.

ABRACON

12117 Bee Caves Rd, Bldg-3, Suite 200 Bee Cave, TX 78738
Phone: 512-371-6159 | Fax: 512-351-8858
For terms and conditions of sales, please visit:
www.abracon.com

REVISED: 09-17-26

ABRACON IS ISO9001-2015 CERTIFIED

GNSS L1/L2/L5/L6 SMD Dual-SAW Filter

AFII-SW-0094-Q

Request Samples | Check Inventory

1.5 x 1.1 x 0.38 mm
RoHS Compliant
MSL Level = 1

Packaging

Tape & Reel Dimension

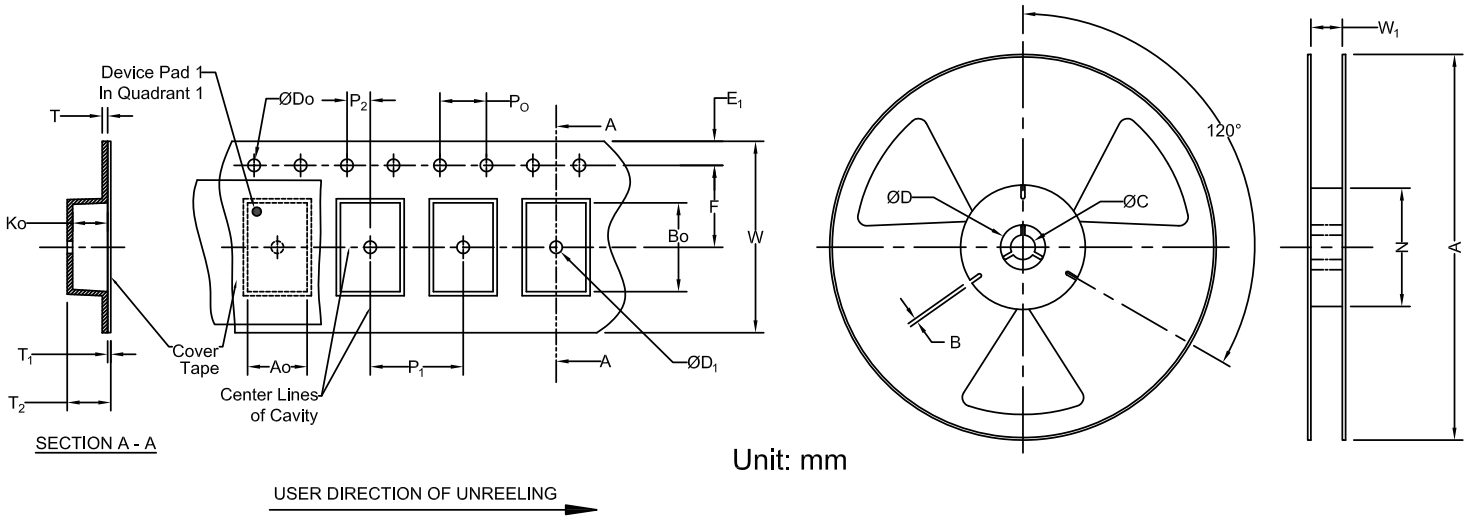

Unit: mm

Carrier Tape Specifications (mm)											
Do	D_1	E_1	P_0	P_2	F	P_1	W	A_0	B_0	K_0	Reel Qty
1.5 + 0.1/-0	0.60 ± 0.05	1.75 ± 0.1	4.0 ± 0.1	2.0 ± 0.05	3.5 ± 0.05	4.0 ± 0.1	8.0 ± 0.2	1.35 ± 0.1	1.65 ± 0.1	0.75 ± 0.05	5,000

Reel Specifications (mm)				
A	W_1	N	C	D
178.0 ± 1.0	9.5 ± 0.5	60 ± 0.5	13.5 ± 0.5	21 ± 0.8

ATTENTION: Abracon LLC's products are Commercial-Off-The-Shelf ('COTS'), which are designed, intended, and validated for use in commercial, industrial, and automotive applications. The customer is responsible for testing and verifying the performance of an Abracon solution to meet their system-level requirements.

ABRACON

12117 Bee Caves Rd, Bldg-3, Suite 200 Bee Cave, TX 78738
Phone: 512-371-6159 | Fax: 512-351-8858
For terms and conditions of sales, please visit:
www.abracon.com

REVISED: 09-17-26

ABRACON IS ISO9001-2015 CERTIFIED