KYCON, Inc. 305 Digital Drive, Morgan Hill, CA 95037 (408)494-0330

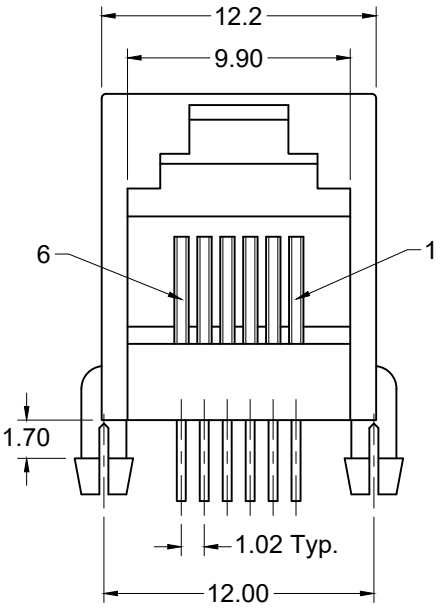


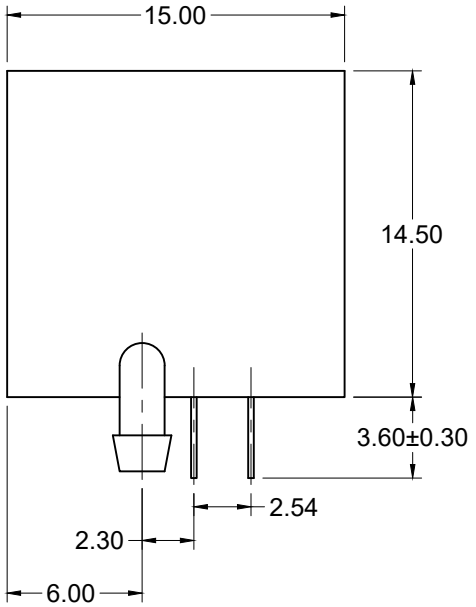


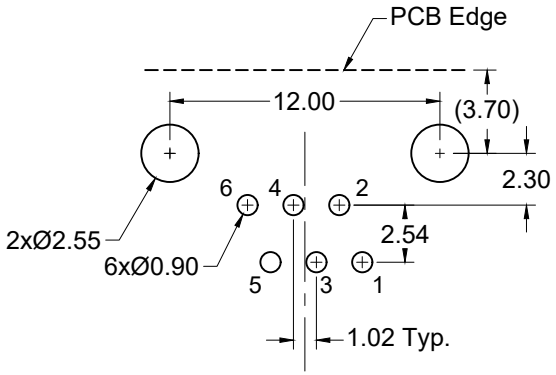


Recommended PCB Layout
(Bottom View)

### *Materials and Finish*

Housing Material-
PBT thermoplastic
UL 94V-0 rated

Contact Material-
phosphor bronze

Contact Plating Options-

Standard: gold flash on contact area, tin on solder area, all over nickel underplate

15: 15u" gold on contact area tin on solder area, all over nickel underplate

50: 50u" gold on contact area tin on solder area, all over nickel underplate

### *Electrical Characteristics*

Current Rating-
1.5 Amps

Voltage Rating-
125V DC

Insulation Resistance-
500 Megohms min.

Dielectric Withstanding Voltage-
1000V rms, 60Hz

Contact Resistance-
20 milliohms max.

Operating Temperature-
-40°C to +85°C

| Part Number | Contact Area Plating Finish | Color |
|---|---|---|
| GLX-N-66 | Gold Flash (standard) | Grey |
| GLX-N-66-15 | 15u" Gold (15 option) | Grey |
| GLX-N-66-50 | 50u" Gold (50 option) | Grey |
| GLX-N-66-BLK | Gold Flash (standard) | Black |

RoHS COMPLIANT

E134345 LR78160

| Tolerances |
|---|
| X.X ± 0.35 |
| X.XX ± 0.25 |
| Unless Stated Otherwise |

| REV. | DATE | DESCRIPTION | REV. BY | CHK. BY |
|---|---|---|---|---|
| A4 | 05/13/10 | ECO #10-025 | S. Vien | H. MA |
| A5 | 12/07/11 | ECO #11-081 | S. Vien | H. MA |
| A6 | 12/12/13 | ECO #13-091 | D. Gih | H. MA |
| A7 | 06/05/17 | Updated Address | H. MA | N/A |
| A8 | 10/24/25 | ECO #25-048 | K.Wang | C.Kelleher |
| A9 | 04/10/26 | ECO #26-006 | C. Kelleher | K. Wang |

| DRAWN BY | DATE |
|---|---|
| R. Aguirre | 9/16/05 |
| | UNITS |
| | mm |

# GLX-N-66

Right Angle Modular Jack, Through Hole, .570" Ht.

6 Position, 6 Contacts, No Panel Stops, RoHS Compliant

KYCON